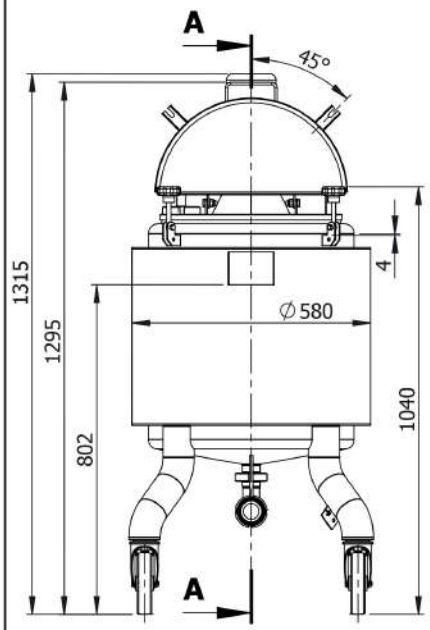

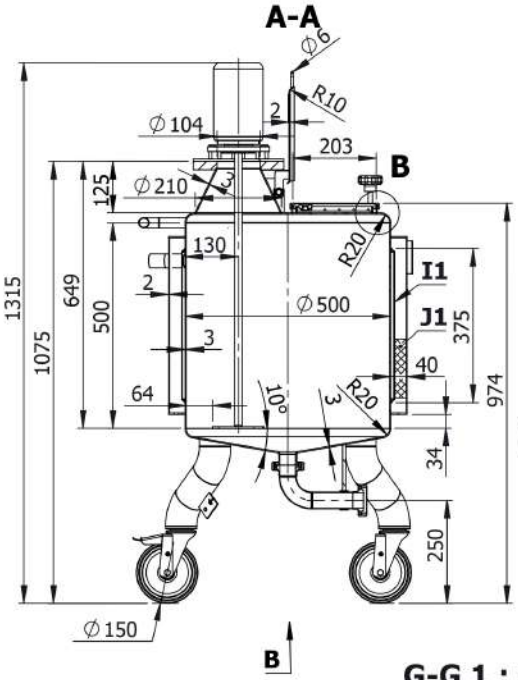

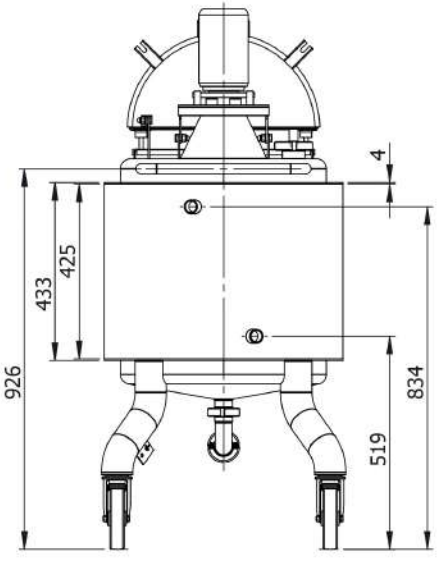

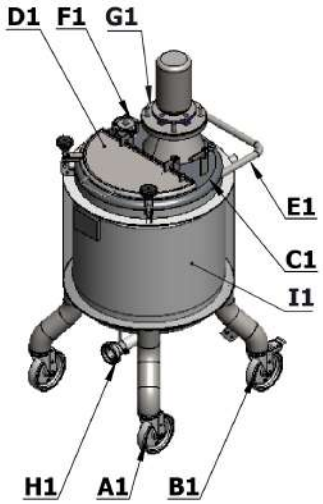

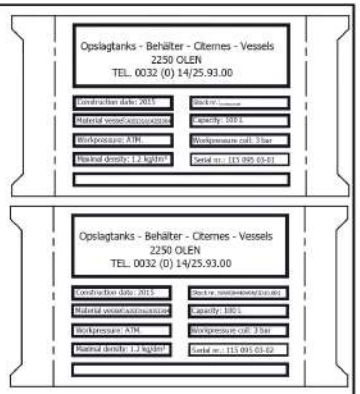

D-D 1 : 10

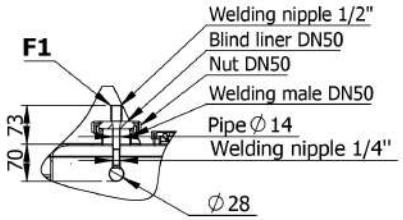

B 1 : 4

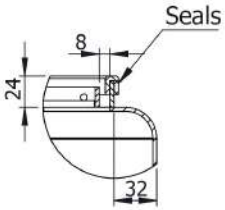

H-H

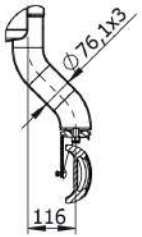

G-G 1 : 2

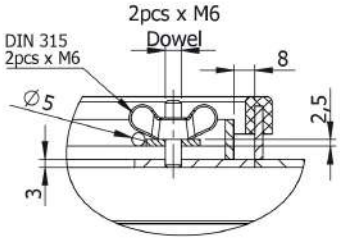

Schnellmischer:
1.RW9532V6N 0,25kW 1500rpm 400V
2.RW9533V6N 0,12kW 680rpm 400V

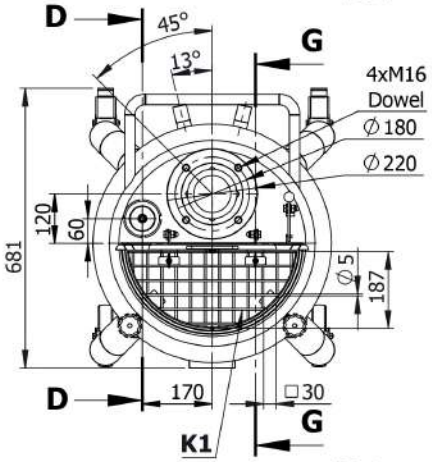

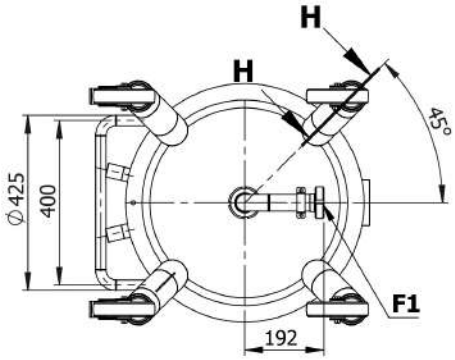

Item	Description	PN MPa	DN mm.	Qty.
A1	TUBULAR LEG ON WHEEL WITHOUT BREAK - AISI 304	-	-	2
B1	TUBULAR LEG ON WHEEL WITH BREAK - AISI 304	-	-	2
C1	1/2 FIXED LID - AISI 316	-	-	1
D1	1/2 HINGED LID - AISI 316	-	-	1
E1	HOLDER FOR PUSHING THE TANK - AISI 304	-	-	1
F1	DISMOUNTABLE STATIC CIP SPRAY BALL Φ28 360° UP TO WELDING MALE NIPPLE - AISI 316	atm.	G1/2"	1
G1	INLET FOR AGITATOR UP TO FLANGE; Ø220mm; s20 - AISI 316 - agitator and mounting of the agitator are not included	-	100	1
H1	DISMOUNTABLE TOTAL OUTLET UP TO WELDING LINER AND NUT DIN 11851 - AISI 316	atm.	40	1
I1	DIMPLE JACKET ON TANK SHELL H=375mm F=0.55m2 Tmax=100°C INLET/OUTLET ON JACKET UP TO WELDING MALE NIPPLE - AISI 304	0.3	G1"	1
J1	INSULATION MINERAL WOOL 40mm WITH DECORATIVE CASING DIMPLE JACKET ON THE TANK SHELL D=580mm H=425mm 2.0mm - AISI 304	-	-	1
K1	SAFETY GRID 412x187 ON HINGED LID - AISI 316	-	-	1

Surface	Outside	2B	Welding seam	Outside	strip grinded to Ra<1,6
	Inside	2B		Inside	flat grinded to Ra<0,8

1.6 min.0,5x45° **Not-indicated tolerances of dimensions of length and angles, shapes and positions are according to EN ISO 13920:2006**

Drawn.: **I.N.**	Scale 1:13	Mass 99.2	AISI 316 AISI 304	Order.№ 115 095 03 WWG9448V6N/ID10.890 /ID10.891
Checket: **K.I.**	VERTICAL MOBILE TANK TYPE VC-HICA Vtotal=0.1m3			
Eng.App.: **D.M.**		2.4.2015 г.		Sheet 1/1

Note:
Please keep in mind that the temperature in the heat exchange jacket is at 100°C ,the surface temperature can be over 40°C.