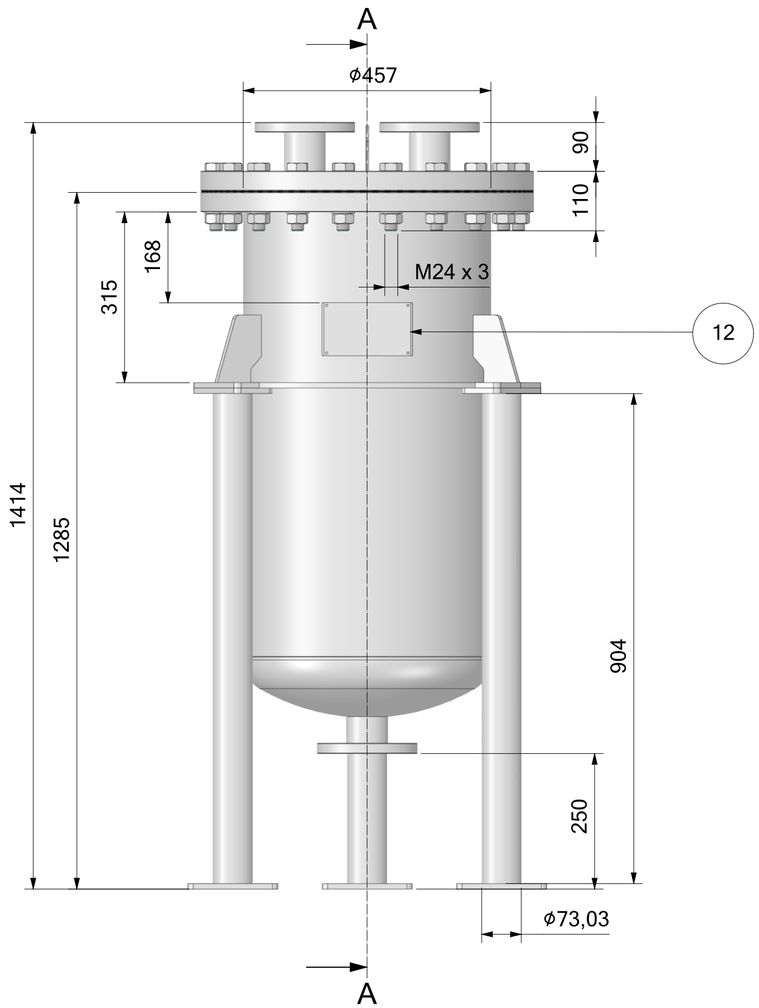

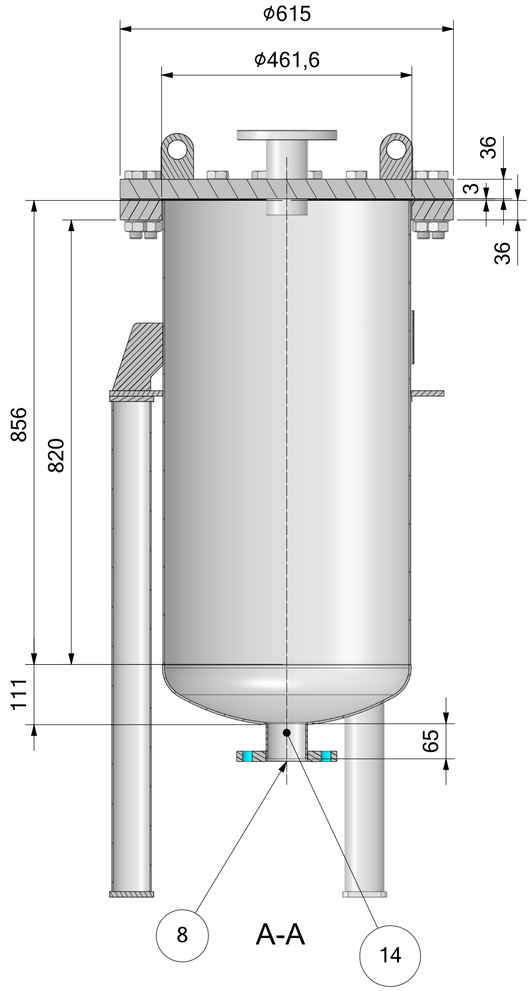

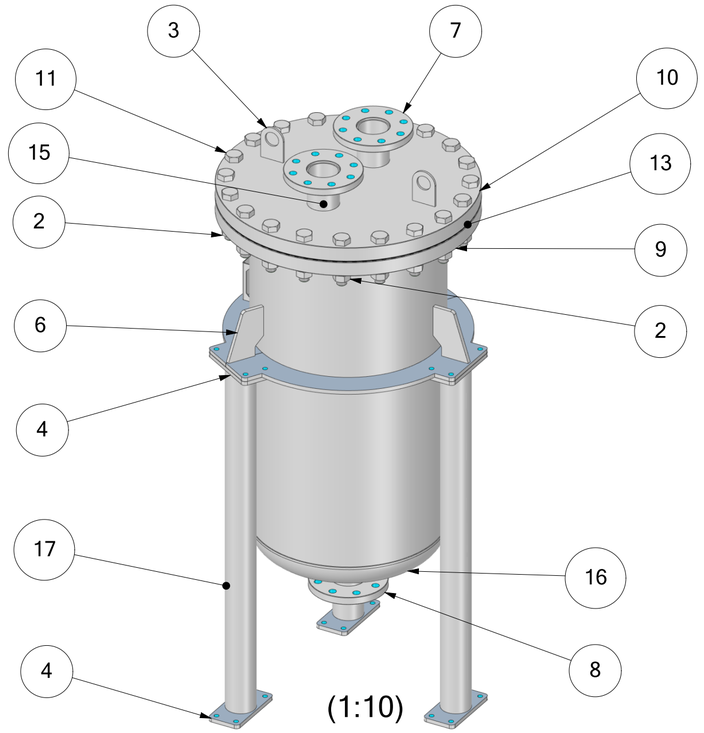

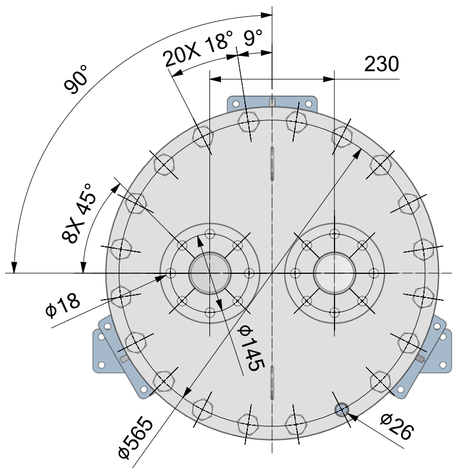

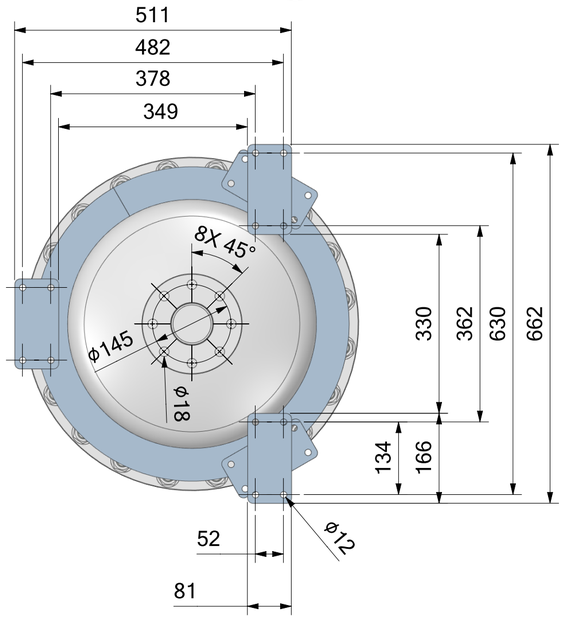

ITEM NO.	PART NUMBER	QTY	Material
1	DIN 125 M24-A4.2	20	A4
2	DIN 934 M24-A4.2	20	A4
3	EW 14 025 V6N Lifting lug	2	AISI 316
4	EW 14 025 V6N PLATE CONNECTION	6	AISI 316
5	EW 14025 V6N PLATE RING	2	AISI 316
6	EW 14 025 V6N Rib	3	AISI 316
7	Flange 2576 DN65-PN16	2	AISI 316
8	FlangeEN 1092-1 Type 1 PN10 DN65	1	AISI 316
9	Flange EN 1092-1 Type 1 PN10 DN450	1	AISI 316
10	Flange EN 1092-1 Type 1 PN10 DN450 blind	1	AISI 316
11	ISO 4014 (DIN 931) M24x110-A4.2	20	A4
12	Name plate STAES	1	
13	Seal Flange EN 1092-1 Type 1 PN10 DN450.2	1	PTFE
14	Tube DN65 Ø76,1x3	1	AISI 316
15	TUBE END DN65 Ø76,1x3-2	2	AISI 316
16	Tube end DN450.2	1	AISI 316
17	TUBE END Ø73,03x3-1	3	AISI 316
18	TUBE Ø457x3	1	AISI 316

STAES.COM
Nijverheidsstraat 48 A
B-2260 Oevel
Belgium
TEL +32 (0)14 259 300 johan@staes.com

This drawing remaines the property of Staes. No use or reproduction without permission of Staes.

SIZE	CAGE CODE	DWG NO. EW 14 025 V6N	REV
A2	STAES	Vol=150L	A
SCALE 1:8		AISI 316	SHEET 1 of 1