Revisions					
Rev	Description	Zone	Date	Drawn	Checked

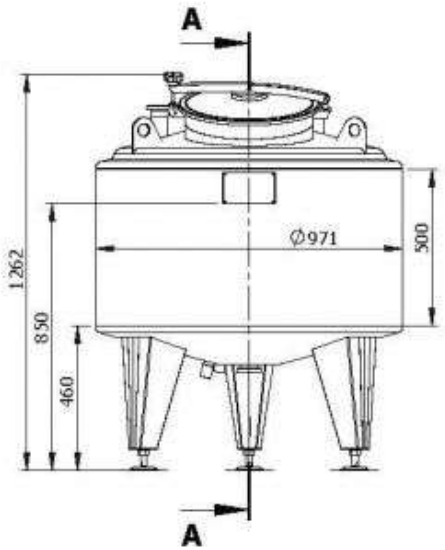

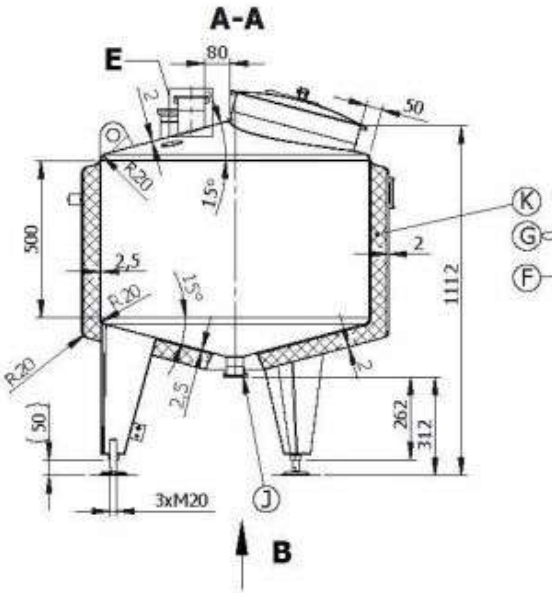

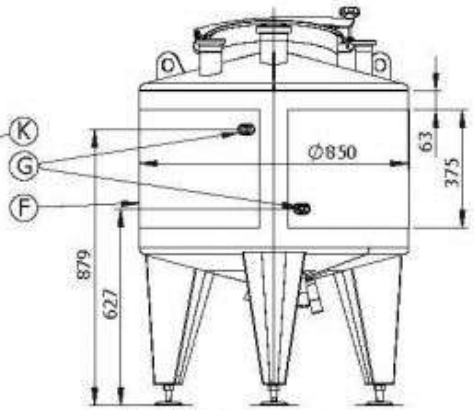

On this view are not shown insulation and cladding

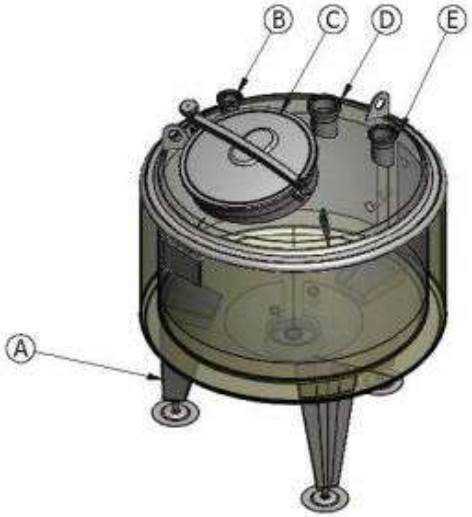

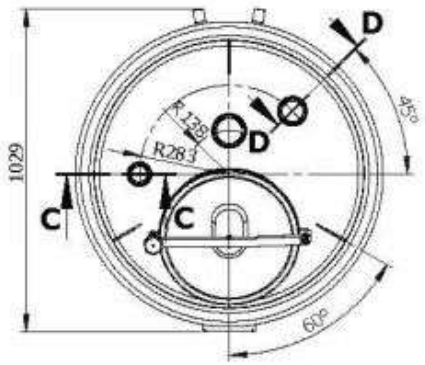

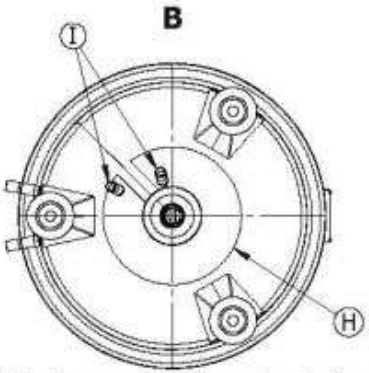

On this view are not shown insulation and cladding on the bottom

Item	Description	PN bar	DN mm.	Qty.
A	LEG ON ADJUSTABLE SUPPORT	-	-	3
B	INLET DN50 ON TANK TOP UP TO WELDING MALE DN50 DIN11851	atm.	50	1
C	UPPER MANHOLE DN400 Elica art. 50/1p-6 WITH EPDM-FDA-GASKET	atm.	400	1
D	INLET DN80 CENTRICALLY MOUNTED ON TANK TOP UP TO WELDING MALE DN80 DIN11851	atm.	80	1
E	INLET AIR VENT DN65 ON TANK TOP UP TO WELDING MALE DN65 DIN11851	atm.	65	1
F	LASER-WELDED DIMPLE JACKET ON TANK SHELL H=375mm / F=0.96m2 *heating agent hot water at Pmax=3bar and Tmax=110°C	3	-	1
G	INLET/OUTLET CHANNEL JACKET ON TANK SHELL UP TO WELDING MALE G1"	3	G1"	2
H	LASER-WELDED DIMPLE JACKET ON TANK BOTTOM F=0.12m2 *heating agent hot water at Pmax=3bar and Tmax=110°C	3	-	1
I	INLET/OUTLET DIMPLE JACKET ON TANK BOTTOM UP TO WELDING MALE G1"	3	G1"	2
J	TOTAL OUTLET DN50 UP TO WELDNIG MALE DN50 DIN11851	atm.	50	1
K	INSULATION MINERAL WOOL 50mm ON TANK SHELL AND BOTTOM WITH STAINLESS STEEL AISI 304L WELDED CLADDING	-	-	1

Straightness, flatness and parallelism - EN 13920 F								Linear dimensions - EN 13920 B							
≥30 ≤120	>120 ≤400	>400 ≤1000	>1000 ≤2000	>2000 ≤4000	>4000 ≤8000	>8000 ≤12000	>12000 ≤16000	≥2 ≤30	>30 ≤400	>400 ≤1000	>1000 ≤2000	>2000 ≤4000	>4000 ≤8000	>8000 ≤12000	>12000 ≤16000
1	1.5	3	4.5	6	8	10	12	±1	±2	±3	±4	±6	±8	±10	±12

Surface			Weld. seams		
	Outside	Matt 2B		Outside	Strip grinded 2x20 to Ra<1,6
	Inside	Matt 2B		Inside	Flat grinded to Ra<0,8

C-C 1 : 10

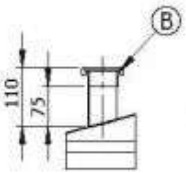

D-D 1 : 10

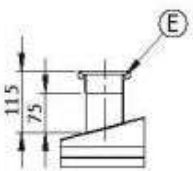

E 1 : 10

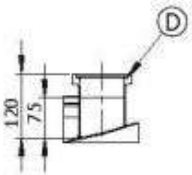

TYPE K3-H12W.IL

Serial number	119 903 01	Stock nr.	WWG11.483V6LN
Geometrical volume	340 g	Geometrical volume - jacket	3,9 l
Working pressure	Atmospheric	Working pressure - jacket	3,0 bar
Working temperature	-10/100°C	Working temperature - jacket	-10/110°C
Maximum density	1,3kg/dm³	Jacket pressure drop	-
Tare mass	124 kg	Material	1.4404 / AISI 316L
Equipment output/voltage	-	Year of manufacture	

1.6	Drawn: K.N.	Scale 1:17	Weight 124	1.4404 AISI 316L	119 903 01 WWG11.483V6LN
	Checked: K.I.	TYPE K3-H12W.IL-340L			
	Approved: D.M.		Rev	6.8.2019 r.	Lang Eng / Sheet 1/1