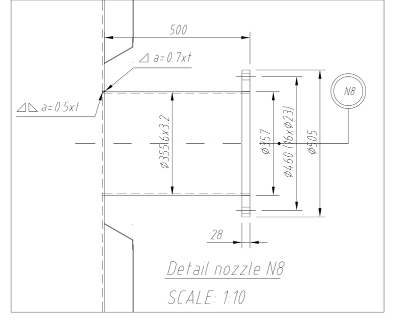

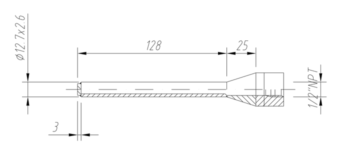

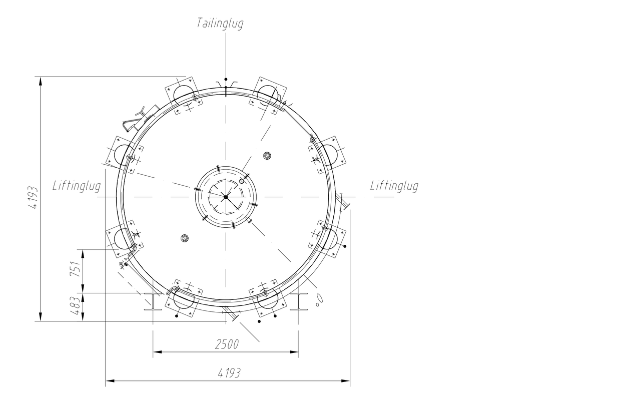

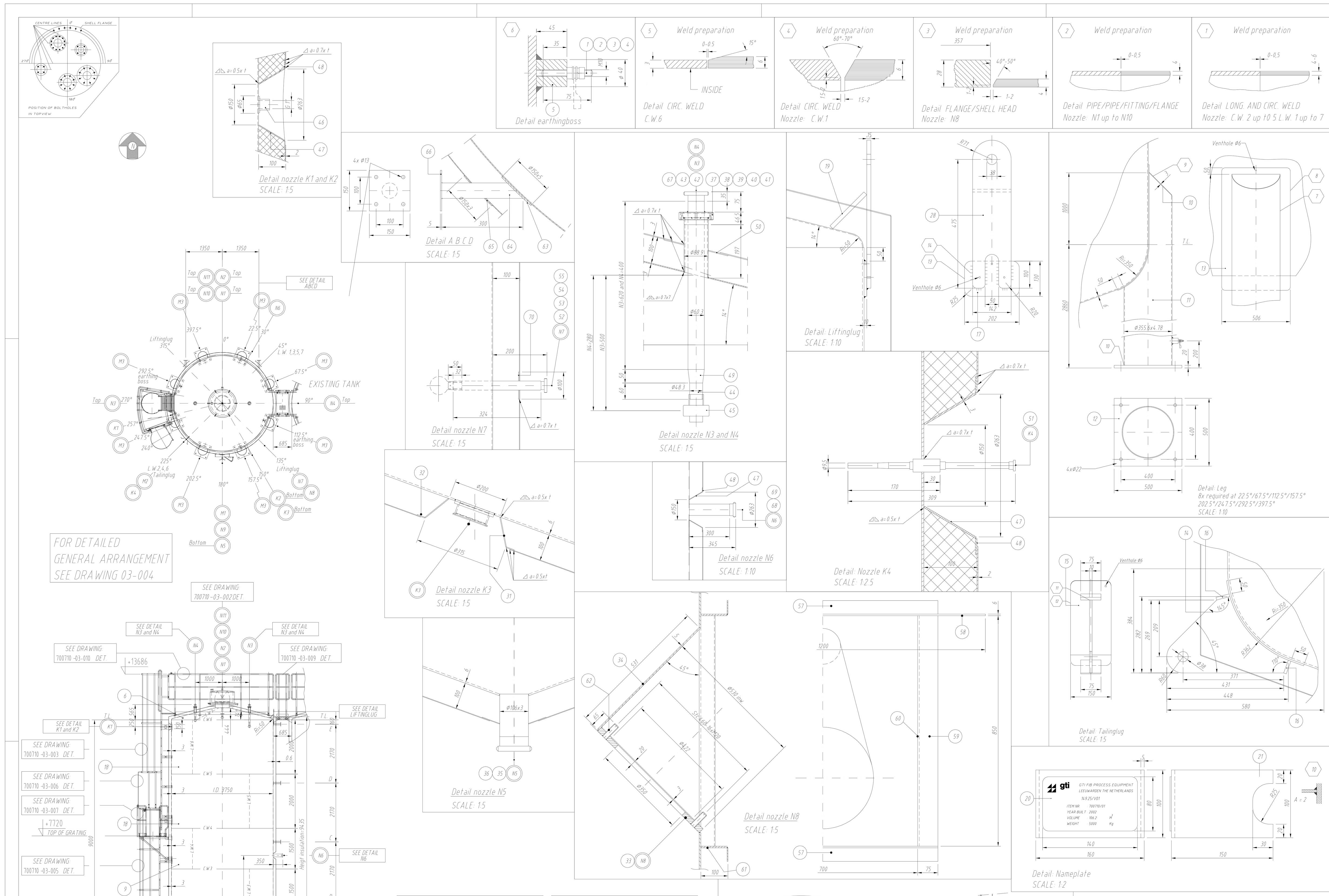

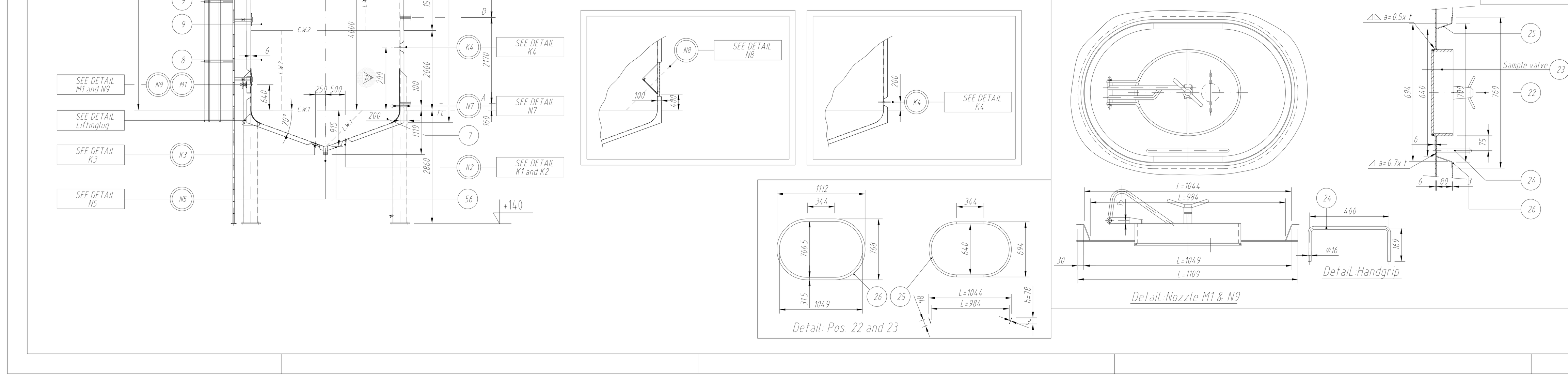

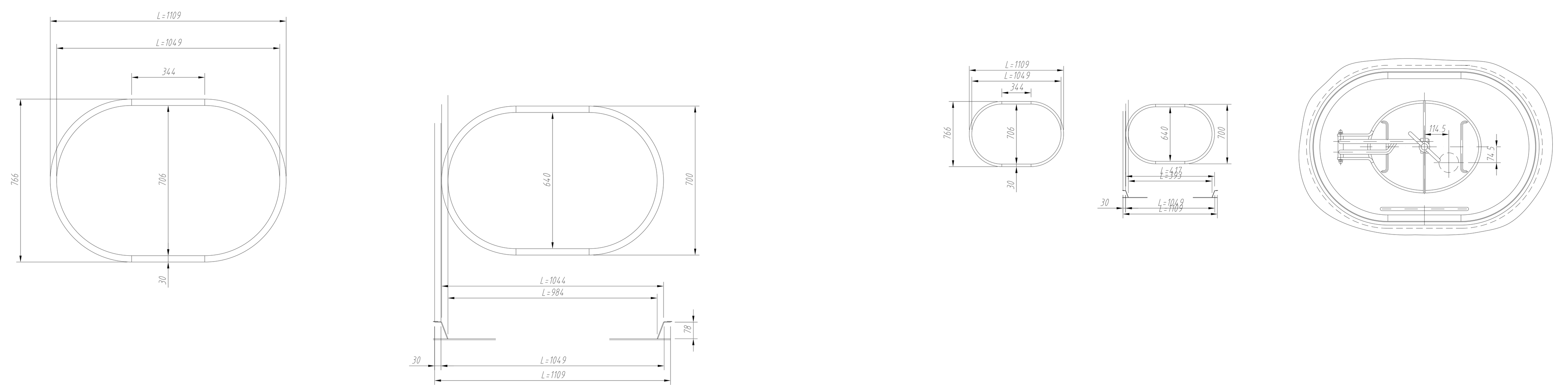

Mechanical data

Design code	Stoomwezen rules for pressure vessels			
Inspection	DSM / GIT - FIB			
Design pressure	-0.006/0.02		-	barg
Design temperature	100	-	-	°C
Operating pressure	ATM	-	-	barg
Operating temperature	45-80	-	-	°C
Test pressure	AIR SOAP TEST	-	-	barg
Volume	NETT 104 GROSS 106.2	-	-	m³
Corrosion allowance	-	-	-	mm
Joint efficiency	-	-	-	
X-ray	10%	-	-	%
Danger class	-	-	-	
Weight empty	5000	-	-	Kg
Weight full of water	111200			Kg
Welding method	See WPS			
Surface treatment SS	Pickled and passivated. Internal surface preparation Ra=<0.8µ			
	Internal weld preparation Ra=<0.8µ			
CS	-			
	-			
Tolerances according	-			
Flange gasket contact face finish	-			
Bolt holes in the flanges to straddle centerlines unless otherwise shown on dwg				

Process connection

Mark	Numb Req	Service	Nom Bore	Pipe	Flange connection
N1	1	Vent	500	508x3	DIN11851
N2	1	CIP Connection ontl. hoed	40	48.3x2	DIN11851
N3	1	CIP Connection	80/50	84x2	DIN11851
N4	1	CIP Connection	80/50	84x2	DIN11851
N5	1	Inlet/Outlet	100	106x3	DIN11851
N6	1	Recycle	80	82x2	DIN11851
N7	1	CIP Connection MIXER	25	33.7x2	CIP Connection
N8	1	Padflange MIXER	350	355.6x3	DIN11851
N9	1	Sample connection	15	21.3x1	-
N10	1	Afgas ontl. hoed	150	154x2	DIN11851
N11	1	Drain	50		DIN11851

Instrument connection

Mark	Numb Req	Service	Nom Bore	Pipe	Flange connection
K1	1	Sock E&H 129855-000	G1"	-	Delivered by purchaser
K2	1	Sock E&H 129855-000	G1"	-	Delivered by purchaser
K3	1	Tank spud F-R 1199-0061-001	-	-	Delivered by purchaser
K4	1	Welded-in wall hole diam.24mm	-	-	Delivered by purchaser

Other connection

Mark	Numb Req	Service	Nom Bore	Pipe	Flange connection
M1	1	Manhole	400x500	-	Knudsen LKTDI 410/510
M2	1	Nameplate	-	-	-
M3	8	Legs	350	355.6x4.78	-

General notes

01	Insulation 100mm

REV MARK	POS NO	NUMB REQ	DESCRIPTION / DIMENSION	MATERIAL	CERT
B	47	4	Cone D=263 x d=150 H=97 t=3	1.4404 DIN17441	-
	46	2	Sock 1"G	E & H 129855-0000 (Delivered by DSM)	-
B	45	2	Turbodisc 1 1/2" 150 - 360°	1.4404 DIN17441	-
B	44	2	Nipple weld 1 1/2" BSP	1.4404	-
B	43	2	Male part DN50 DIN11851	1.4404	-
B	42	2	Pipe Welded D=60.3x2 L=620	A312TP316L	3.1B
B	41	2	Nut DN80 DIN11851	1.4404	-
B	40	2	Liner blank DN80 DIN11851	1.4404	-
B	39	2	Gasket DN80 DIN11851	EPDM	-
B	38	2	Male part DN80 DIN11851	1.4404	-
B	37	2	Pipe Welded D=88.9x2 L=200	A312TP316L	3.1B
B	36	1	Male part DN100 DIN11851	1.4404	-
B	35	1	Pipe Welded D=106x3 L=157	1.4404 DIN17457	3.1B
A	34	1	Plate 5 1673x531	1.4404 DIN17440	-
B	33	1	Flange DN350 Ø530xØ350x20 Stc 460-16xM20	1.4404 DIN17440	3.1B
D	32	1	Plate 3 D=380 d=320	1.4404 DIN17441	-
D	31	1	Cone D=315 D=200 H=97 t=3	1.4404	-
-	30	-	-	-	-
-	29	-	-	-	-
A	28	2	Plate 15 546x142	1.4404 DIN17440	-
-	27	-	-	-	-
A	26	1	Plate 2 1109x762	1.4404 DIN17441	-
A	25	1	Cone D=694/640 x L=1044/984 h=78 t=3	1.4404 DIN17441	-
B	24	1	Bar 16 L=1019	1.4404 DIN17441	-
B	23	1	Sample valve DN15 APV type PRD 20-RF (art.no.20-37-058/59)	1.4404	-
B	22	1	Manhole 410x510 LKTDI	1.4404 DIN17440 / EPDM Seal	3.1B
A	21	1	Plate 5 440x100	1.4404 DIN17440	3.1B
A	20	1	Nameplate 2 80x140	SS	-
	19	2	Plate 10 142x177	1.4404 DIN17440	-
B	18	2	Plate 3 2000x11790	1.4404 DIN17440	3.1B
A	17	2	Plate 10 202x130	1.4404 DIN17440	3.1B
B	16	2	Flatbar 50x10 L=75	1.4404 DIN17440	-
A	15	1	Plate 6 150x446	1.4404 DIN17440	3.1B
A	14	1	Plate 10 448x282	1.4404 DIN17440	-
B	13	8	Plate 6 1480x506	1.4404 DIN17440	3.1B
B	12	8	Plate 20 500x500	1.4404 DIN17440	-
B	11	8	Pipe Welded D=355.6x4.78 L=3840	1.7458	3.1B
B	10	8	Plate 4 273x183	1.4404 DIN17440	-
	9	2	Plate 3 1500x11790	1.4404 DIN17440	3.1B
	8	1	Plate 6 1500x11800	1.4404 DIN17440	3.1B
A	7	1	Head CO Id=3750 H=915 r=350 ang=20° t=6	1.4404 DIN17440	3.1B
A	6	1	Head CO Id=3750 H=447 r=50 ang=14° t=3	1.4404 DIN17440	3.1B
B	5	2	Bar D=40 L=45	1.4404 DIN17440	-
B	4	2	Studbolt M10x75	Brass	-
B	3	2	Springwasher M10 DIN127B	RVS	-
B	2	4	Washer M10 DIN125A	Brass	-
B	1	4	Nut M10 DIN934	Brass	-

REV MARK	POS NO	NUMB REQ	DESCRIPTION / DIMENSION	MATERIAL	CERT
B	70	1	Plate 3 D=100 d=34	1.4404 DIN17440	-
A	69	1	Pipe Welded D=84x2 L=300	1.4404 DIN17457	3.1B
B	68	1	Male part DN80 DIN11851	1.4404	-
B	67	2	Pipe Welded D=60.3x2 L=400	A312TP316L	3.1B
B	66	10	Plate 5 150x50	1.4404 DIN17440	-
B	65	10	Plate 3 D=150 d=81	1.4404 DIN17440	-
B	64	10	Pipe Welded D=60.3x2.77 L=300	A312TP316L	-
B	63	10	Plate 5 D=150	1.4404 DIN17440	-
B	62	16	Studbolt M20x65	A2-70 DIN267	-
B	61	1	Plate 97x6 L=850	1.4404 DIN17440	-
B	60	2	Plate 97x6 L=850	1.4404 DIN17440	-
A	59	2	Plate 75x3 L=850	1.4404 DIN17441	-
A	58	1	Plate 6 50x6 L=1200	1.4404 DIN17440	-
A	57	2	Plate 50x3 L=850	1.4404 DIN17441	-
D	56	1	Plate 0.6	1.4404 DIN17440	-
B	55	1	Sprayball 1"-OT 1a (fixed)	Tuchenhagen	-
D	54	1	Pipe Welded D=26.7x2 L=50	1.4404 DIN17457	-
B	53	1	Male part DN25 DIN11851	1.4404	-
B	52	1	Pipe Welded D=33.7x2 L=324	1.4404 DIN17457	3.1B
B	51	1	Thermowell (delivered by DSM)	-	-
D	50	2	Plate 3 D=243 d=92	1.4404 DIN17440	-
B	49	2	Red conc. D=60.3xD=48.3 - 2x2 DIN2616	1.4404	-
B	48	4	Plate 3 D=326 d=266	1.4404 DIN17441	-

DSM
DSM Gist B.V. Delft - Holland

Code no. 1 4 0 5 4 0 5 0 3 0 1 (Building / S1 / Dest. / S2 / Year)
Project no. 8173 — Autocad — Size A1
Drawing no. 0 0 1 W 5 4 3 2 7 A (Location / D. / Serial no. / Iss.)

AS BUILT STATUS FIB	AS BUILT STATUS CLIENT	N.A. STATUS INSP. AUTHORITY
0 · A	B · C	D 31-10-2002 · E

SCALE	1:50	DATE	REMARKS
DRAWN	F. Hesseling	02-07-2002	SEE DRAWING 001W54330
CHECKED	T. de Jong	31-10-2002	-

REVISED: A FH 22-07-2002 · B 06-08-2002 FH · C 14-08-2002 MP · D 31-10-2002 TE

PROJECT: ALLIANCE MASTERPLAN
DSM GIST PROJECT MAXIMA

SUBJECT: RESTGISTTANK ITEMNR. 140.20/V03
GENERAL ARRANGEMENT

ITEM NO 700710/03 · REG.NO. - · FORM A0 · DRWG.NO. 700710 · SHEET NO 03-001

gti GTI FIB Process Equipment
EINSTEINWEG 23 8912 AP LEEUWARDEN | POSTBUS 314 8901 BC LEEUWARDEN | TEL. 058 294 59 45 FAX 058 212 57 42 | www.fib.nl engineering@fib.nl

This document is confidential. Neither the whole or any part of this document may be disclosed to any third party or reproduced in any form without written consent of GTI FIB Process Equipment