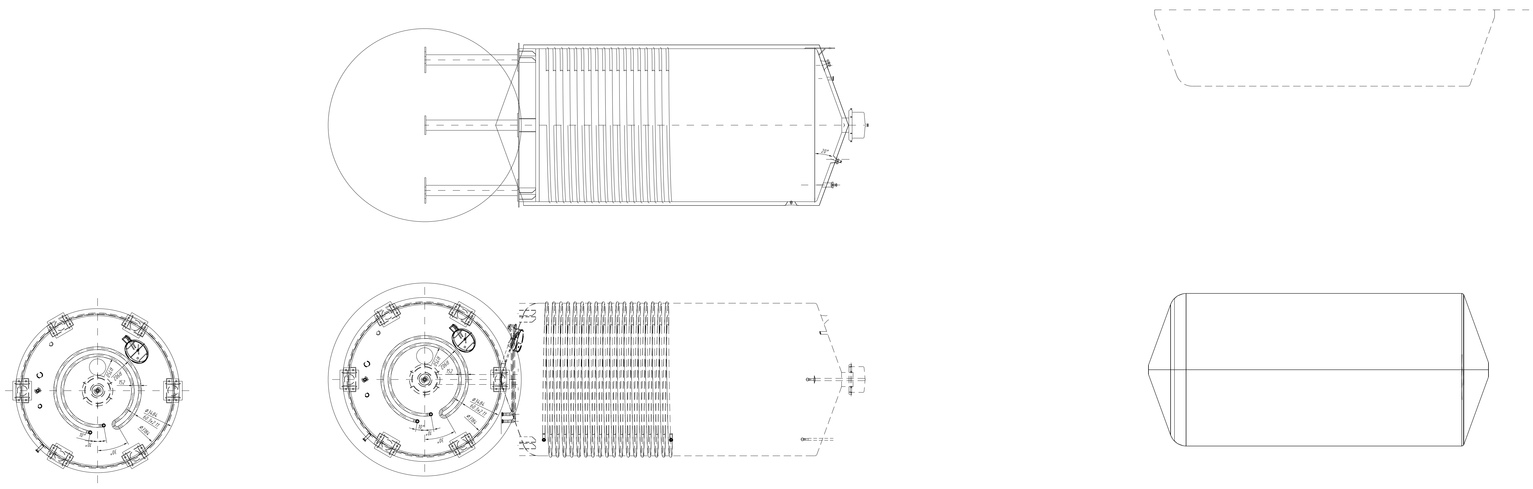

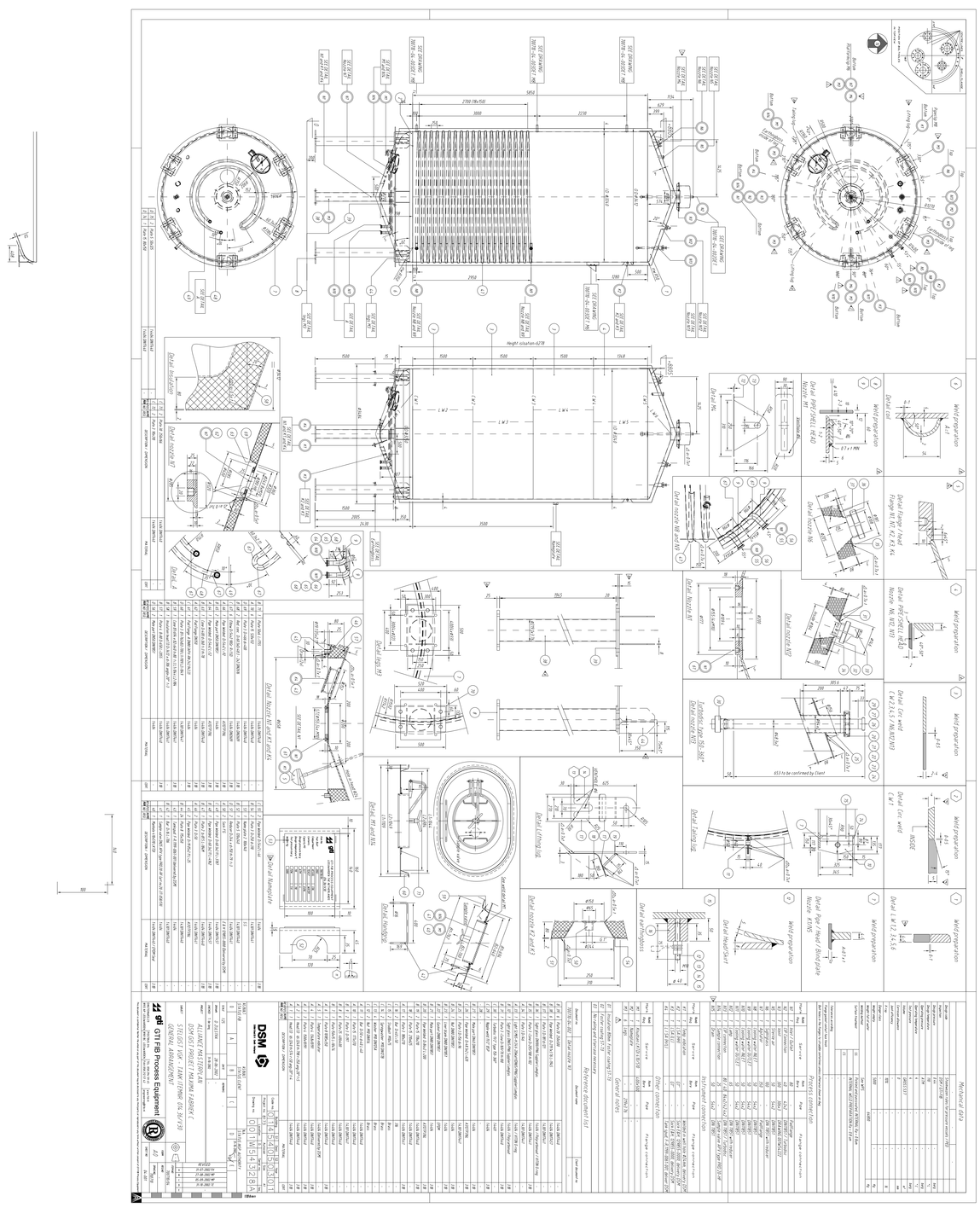
Mechanical data
Process connection
Other connection
Reference document list
DSM
GTT FIB Process Equipment
GENERAL ARRANGEMENT
STELGIST FOR TANK FITTING ON 30/F/09
DSM-GIST PROJECT MAXIMA FABRIK C
Height situation=6278
Detail Nozzle N1 and N2
Detail Nozzle N3 and N4
Detail Nozzle N5 and N6
Detail Nozzle N7 and N8
Detail Lifting lug
Detail Tie lug
Detail Hatch
Detail Manhole
Detail Support
Detail Saddle
Detail Nozzle N9 and N10
Detail Nozzle N11 and N12
Detail Nozzle N13 and N14
Detail Nozzle N15 and N16
Detail Nozzle N17 and N18
Detail Nozzle N19 and N20
Detail Nozzle N21 and N22
Detail Nozzle N23 and N24
Detail Nozzle N25 and N26
Detail Nozzle N27 and N28
Detail Nozzle N29 and N30
Detail Nozzle N31 and N32
Detail Nozzle N33 and N34
Detail Nozzle N35 and N36
Detail Nozzle N37 and N38
Detail Nozzle N39 and N40
Detail Nozzle N41 and N42
Detail Nozzle N43 and N44
Detail Nozzle N45 and N46
Detail Nozzle N47 and N48
Detail Nozzle N49 and N50
Detail Nozzle N51 and N52
Detail Nozzle N53 and N54
Detail Nozzle N55 and N56
Detail Nozzle N57 and N58
Detail Nozzle N59 and N60
Detail Nozzle N61 and N62
Detail Nozzle N63 and N64
Detail Nozzle N65 and N66
Detail Nozzle N67 and N68
Detail Nozzle N69 and N70
Detail Nozzle N71 and N72
Detail Nozzle N73 and N74
Detail Nozzle N75 and N76
Detail Nozzle N77 and N78
Detail Nozzle N79 and N80
Detail Nozzle N81 and N82
Detail Nozzle N83 and N84
Detail Nozzle N85 and N86
Detail Nozzle N87 and N88
Detail Nozzle N89 and N90
Detail Nozzle N91 and N92
Detail Nozzle N93 and N94
Detail Nozzle N95 and N96
Detail Nozzle N97 and N98
Detail Nozzle N99 and N100
Detail Nozzle N101 and N102
Detail Nozzle N103 and N104
Detail Nozzle N105 and N106
Detail Nozzle N107 and N108
Detail Nozzle N109 and N110
Detail Nozzle N111 and N112
Detail Nozzle N113 and N114
Detail Nozzle N115 and N116
Detail Nozzle N117 and N118
Detail Nozzle N119 and N120
Detail Nozzle N121 and N122
Detail Nozzle N123 and N124
Detail Nozzle N125 and N126
Detail Nozzle N127 and N128
Detail Nozzle N129 and N130
Detail Nozzle N131 and N132
Detail Nozzle N133 and N134
Detail Nozzle N135 and N136
Detail Nozzle N137 and N138
Detail Nozzle N139 and N140
Detail Nozzle N141 and N142
Detail Nozzle N143 and N144
Detail Nozzle N145 and N146
Detail Nozzle N147 and N148
Detail Nozzle N149 and N150
Detail Nozzle N151 and N152
Detail Nozzle N153 and N154
Detail Nozzle N155 and N156
Detail Nozzle N157 and N158
Detail Nozzle N159 and N160
Detail Nozzle N161 and N162
Detail Nozzle N163 and N164
Detail Nozzle N165 and N166
Detail Nozzle N167 and N168
Detail Nozzle N169 and N170
Detail Nozzle N171 and N172
Detail Nozzle N173 and N174
Detail Nozzle N175 and N176
Detail Nozzle N177 and N178
Detail Nozzle N179 and N180
Detail Nozzle N181 and N182
Detail Nozzle N183 and N184
Detail Nozzle N185 and N186
Detail Nozzle N187 and N188
Detail Nozzle N189 and N190
Detail Nozzle N191 and N192
Detail Nozzle N193 and N194
Detail Nozzle N195 and N196
Detail Nozzle N197 and N198
Detail Nozzle N199 and N200
Detail Nozzle N201 and N202
Detail Nozzle N203 and N204
Detail Nozzle N205 and N206
Detail Nozzle N207 and N208
Detail Nozzle N209 and N210
Detail Nozzle N211 and N212
Detail Nozzle N213 and N214
Detail Nozzle N215 and N216
Detail Nozzle N217 and N218
Detail Nozzle N219 and N220
Detail Nozzle N221 and N222
Detail Nozzle N223 and N224
Detail Nozzle N225 and N226
Detail Nozzle N227 and N228
Detail Nozzle N229 and N230
Detail Nozzle N231 and N232
Detail Nozzle N233 and N234
Detail Nozzle N235 and N236
Detail Nozzle N237 and N238
Detail Nozzle N239 and N240
Detail Nozzle N241 and N242
Detail Nozzle N243 and N244
Detail Nozzle N245 and N246
Detail Nozzle N247 and N248
Detail Nozzle N249 and N250
Detail Nozzle N251 and N252
Detail Nozzle N253 and N254
Detail Nozzle N255 and N256
Detail Nozzle N257 and N258
Detail Nozzle N259 and N260
Detail Nozzle N261 and N262
Detail Nozzle N263 and N264
Detail Nozzle N265 and N266
Detail Nozzle N267 and N268
Detail Nozzle N269 and N270
Detail Nozzle N271 and N272
Detail Nozzle N273 and N274
Detail Nozzle N275 and N276
Detail Nozzle N277 and N278
Detail Nozzle N279 and N280
Detail Nozzle N281 and N282
Detail Nozzle N283 and N284
Detail Nozzle N285 and N286
Detail Nozzle N287 and N288
Detail Nozzle N289 and N290
Detail Nozzle N291 and N292
Detail Nozzle N293 and N294
Detail Nozzle N295 and N296
Detail Nozzle N297 and N298
Detail Nozzle N299 and N300
Detail Nozzle N301 and N302
Detail Nozzle N303 and N304
Detail Nozzle N305 and N306
Detail Nozzle N307 and N308
Detail Nozzle N309 and N310
Detail Nozzle N311 and N312
Detail Nozzle N313 and N314
Detail Nozzle N315 and N316
Detail Nozzle N317 and N318
Detail Nozzle N319 and N320
Detail Nozzle N321 and N322
Detail Nozzle N323 and N324
Detail Nozzle N325 and N326
Detail Nozzle N327 and N328
Detail Nozzle N329 and N330
Detail Nozzle N331 and N332
Detail Nozzle N333 and N334
Detail Nozzle N335 and N336
Detail Nozzle N337 and N338
Detail Nozzle N339 and N340
Detail Nozzle N341 and N342
Detail Nozzle N343 and N344
Detail Nozzle N345 and N346
Detail Nozzle N347 and N348
Detail Nozzle N349 and N350
Detail Nozzle N351 and N352
Detail Nozzle N353 and N354
Detail Nozzle N355 and N356
Detail Nozzle N357 and N358
Detail Nozzle N359 and N360
Detail Nozzle N361 and N362
Detail Nozzle N363 and N364
Detail Nozzle N365 and N366
Detail Nozzle N367 and N368
Detail Nozzle N369 and N370
Detail Nozzle N371 and N372
Detail Nozzle N373 and N374
Detail Nozzle N375 and N376
Detail Nozzle N377 and N378
Detail Nozzle N379 and N380
Detail Nozzle N381 and N382
Detail Nozzle N383 and N384
Detail Nozzle N385 and N386
Detail Nozzle N387 and N388
Detail Nozzle N389 and N390
Detail Nozzle N391 and N392
Detail Nozzle N393 and N394
Detail Nozzle N395 and N396
Detail Nozzle N397 and N398
Detail Nozzle N399 and N400
Detail Nozzle N401 and N402
Detail Nozzle N403 and N404
Detail Nozzle N405 and N406
Detail Nozzle N407 and N408
Detail Nozzle N409 and N410
Detail Nozzle N411 and N412
Detail Nozzle N413 and N414
Detail Nozzle N415 and N416
Detail Nozzle N417 and N418
Detail Nozzle N419 and N420
Detail Nozzle N421 and N422
Detail Nozzle N423 and N424
Detail Nozzle N425 and N426
Detail Nozzle N427 and N428
Detail Nozzle N429 and N430
Detail Nozzle N431 and N432
Detail Nozzle N433 and N434
Detail Nozzle N435 and N436
Detail Nozzle N437 and N438
Detail Nozzle N439 and N440
Detail Nozzle N441 and N442
Detail Nozzle N443 and N444
Detail Nozzle N445 and N446
Detail Nozzle N447 and N448
Detail Nozzle N449 and N450
Detail Nozzle N451 and N452
Detail Nozzle N453 and N454
Detail Nozzle N455 and N456
Detail Nozzle N457 and N458
Detail Nozzle N459 and N460
Detail Nozzle N461 and N462
Detail Nozzle N463 and N464
Detail Nozzle N465 and N466
Detail Nozzle N467 and N468
Detail Nozzle N469 and N470
Detail Nozzle N471 and N472
Detail Nozzle N473 and N474
Detail Nozzle N475 and N476
Detail Nozzle N477 and N478
Detail Nozzle N479 and N480
Detail Nozzle N481 and N482
Detail Nozzle N483 and N484
Detail Nozzle N485 and N486
Detail Nozzle N487 and N488
Detail Nozzle N489 and N490
Detail Nozzle N491 and N492
Detail Nozzle N493 and N494
Detail Nozzle N495 and N496
Detail Nozzle N497 and N498
Detail Nozzle N499 and N500
Detail Nozzle N501 and N502
Detail Nozzle N503 and N504
Detail Nozzle N505 and N506
Detail Nozzle N507 and N508
Detail Nozzle N509 and N510
Detail Nozzle N511 and N512
Detail Nozzle N513 and N514
Detail Nozzle N515 and N516
Detail Nozzle N517 and N518
Detail Nozzle N519 and N520
Detail Nozzle N521 and N522
Detail Nozzle N523 and N524
Detail Nozzle N525 and N526
Detail Nozzle N527 and N528
Detail Nozzle N529 and N530
Detail Nozzle N531 and N532
Detail Nozzle N533 and N534
Detail Nozzle N535 and N536
Detail Nozzle N537 and N538
Detail Nozzle N539 and N540
Detail Nozzle N541 and N542
Detail Nozzle N543 and N544
Detail Nozzle N545 and N546
Detail Nozzle N547 and N548
Detail Nozzle N549 and N550
Detail Nozzle N551 and N552
Detail Nozzle N553 and N554
Detail Nozzle N555 and N556
Detail Nozzle N557 and N558
Detail Nozzle N559 and N560
Detail Nozzle N561 and N562
Detail Nozzle N563 and N564
Detail Nozzle N565 and N566
Detail Nozzle N567 and N568
Detail Nozzle N569 and N570
Detail Nozzle N571 and N572
Detail Nozzle N573 and N574
Detail Nozzle N575 and N576
Detail Nozzle N577 and N578
Detail Nozzle N579 and N580
Detail Nozzle N581 and N582
Detail Nozzle N583 and N584
Detail Nozzle N585 and N586
Detail Nozzle N587 and N588
Detail Nozzle N589 and N590
Detail Nozzle N591 and N592
Detail Nozzle N593 and N594
Detail Nozzle N595 and N596
Detail Nozzle N597 and N598
Detail Nozzle N599 and N600
Detail Nozzle N601 and N602
Detail Nozzle N603 and N604
Detail Nozzle N605 and N606
Detail Nozzle N607 and N608
Detail Nozzle N609 and N610
Detail Nozzle N611 and N612
Detail Nozzle N613 and N614
Detail Nozzle N615 and N616
Detail Nozzle N617 and N618
Detail Nozzle N619 and N620
Detail Nozzle N621 and N622
Detail Nozzle N623 and N624
Detail Nozzle N625 and N626
Detail Nozzle N627 and N628
Detail Nozzle N629 and N630
Detail Nozzle N631 and N632
Detail Nozzle N633 and N634
Detail Nozzle N635 and N636
Detail Nozzle N637 and N638
Detail Nozzle N639 and N640
Detail Nozzle N641 and N642
Detail Nozzle N643 and N644
Detail Nozzle N645 and N646
Detail Nozzle N647 and N648
Detail Nozzle N649 and N650
Detail Nozzle N651 and N652
Detail Nozzle N653 and N654
Detail Nozzle N655 and N656
Detail Nozzle N657 and N658
Detail Nozzle N659 and N660
Detail Nozzle N661 and N662
Detail Nozzle N663 and N664
Detail Nozzle N665 and N666
Detail Nozzle N667 and N668
Detail Nozzle N669 and N670
Detail Nozzle N671 and N672
Detail Nozzle N673 and N674
Detail Nozzle N675 and N676
Detail Nozzle N677 and N678
Detail Nozzle N679 and N680
Detail Nozzle N681 and N682
Detail Nozzle N683 and N684
Detail Nozzle N685 and N686
Detail Nozzle N687 and N688
Detail Nozzle N689 and N690
Detail Nozzle N691 and N692
Detail Nozzle N693 and N694
Detail Nozzle N695 and N696
Detail Nozzle N697 and N698
Detail Nozzle N699 and N700
Detail Nozzle N701 and N702
Detail Nozzle N703 and N704
Detail Nozzle N705 and N706
Detail Nozzle N707 and N708
Detail Nozzle N709 and N710
Detail Nozzle N711 and N712
Detail Nozzle N713 and N714
Detail Nozzle N715 and N716
Detail Nozzle N717 and N718
Detail Nozzle N719 and N720
Detail Nozzle N721 and N722
Detail Nozzle N723 and N724
Detail Nozzle N725 and N726
Detail Nozzle N727 and N728
Detail Nozzle N729 and N730
Detail Nozzle N731 and N732
Detail Nozzle N733 and N734
Detail Nozzle N735 and N736
Detail Nozzle N737 and N738
Detail Nozzle N739 and N740
Detail Nozzle N741 and N742
Detail Nozzle N743 and N744
Detail Nozzle N745 and N746
Detail Nozzle N747 and N748
Detail Nozzle N749 and N750
Detail Nozzle N751 and N752
Detail Nozzle N753 and N754
Detail Nozzle N755 and N756
Detail Nozzle N757 and N758
Detail Nozzle N759 and N760
Detail Nozzle N761 and N762
Detail Nozzle N763 and N764
Detail Nozzle N765 and N766
Detail Nozzle N767 and N768
Detail Nozzle N769 and N770
Detail Nozzle N771 and N772
Detail Nozzle N773 and N774
Detail Nozzle N775 and N776
Detail Nozzle N777 and N778
Detail Nozzle N779 and N780
Detail Nozzle N781 and N782
Detail Nozzle N783 and N784
Detail Nozzle N785 and N786
Detail Nozzle N787 and N788
Detail Nozzle N789 and N790
Detail Nozzle N791 and N792
Detail Nozzle N793 and N794
Detail Nozzle N795 and N796
Detail Nozzle N797 and N798
Detail Nozzle N799 and N800
Detail Nozzle N801 and N802
Detail Nozzle N803 and N804
Detail Nozzle N805 and N806
Detail Nozzle N807 and N808
Detail Nozzle N809 and N810
Detail Nozzle N811 and N812
Detail Nozzle N813 and N814
Detail Nozzle N815 and N816
Detail Nozzle N817 and N818
Detail Nozzle N819 and N820
Detail Nozzle N821 and N822
Detail Nozzle N823 and N824
Detail Nozzle N825 and N826
Detail Nozzle N827 and N828
Detail Nozzle N829 and N830
Detail Nozzle N831 and N832
Detail Nozzle N833 and N834
Detail Nozzle N835 and N836
Detail Nozzle N837 and N838
Detail Nozzle N839 and N840
Detail Nozzle N841 and N842
Detail Nozzle N843 and N844
Detail Nozzle N845 and N846
Detail Nozzle N847 and N848
Detail Nozzle N849 and N850
Detail Nozzle N851 and N852
Detail Nozzle N853 and N854
Detail Nozzle N855 and N856
Detail Nozzle N857 and N858
Detail Nozzle N859 and N860
Detail Nozzle N861 and N862
Detail Nozzle N863 and N864
Detail Nozzle N865 and N866
Detail Nozzle N867 and N868
Detail Nozzle N869 and N870
Detail Nozzle N871 and N872
Detail Nozzle N873 and N874
Detail Nozzle N875 and N876
Detail Nozzle N877 and N878
Detail Nozzle N879 and N880
Detail Nozzle N881 and N882
Detail Nozzle N883 and N884
Detail Nozzle N885 and N886
Detail Nozzle N887 and N888
Detail Nozzle N889 and N890
Detail Nozzle N891 and N892
Detail Nozzle N893 and N894
Detail Nozzle N895 and N896
Detail Nozzle N897 and N898
Detail Nozzle N899 and N900
Detail Nozzle N901 and N902
Detail Nozzle N903 and N904
Detail Nozzle N905 and N906
Detail Nozzle N907 and N908
Detail Nozzle N909 and N910
Detail Nozzle N911 and N912
Detail Nozzle N913 and N914
Detail Nozzle N915 and N916
Detail Nozzle N917 and N918
Detail Nozzle N919 and N920
Detail Nozzle N921 and N922
Detail Nozzle N923 and N924
Detail Nozzle N925 and N926
Detail Nozzle N927 and N928
Detail Nozzle N929 and N930
Detail Nozzle N931 and N932
Detail Nozzle N933 and N934
Detail Nozzle N935 and N936
Detail Nozzle N937 and N938
Detail Nozzle N939 and N940
Detail Nozzle N941 and N942
Detail Nozzle N943 and N944
Detail Nozzle N945 and N946
Detail Nozzle N947 and N948
Detail Nozzle N949 and N950
Detail Nozzle N951 and N952
Detail Nozzle N953 and N954
Detail Nozzle N955 and N956
Detail Nozzle N957 and N958
Detail Nozzle N959 and N960
Detail Nozzle N961 and N962
Detail Nozzle N963 and N964
Detail Nozzle N965 and N966
Detail Nozzle N967 and N968
Detail Nozzle N969 and N970
Detail Nozzle N971 and N972
Detail Nozzle N973 and N974
Detail Nozzle N975 and N976
Detail Nozzle N977 and N978
Detail Nozzle N979 and N980
Detail Nozzle N981 and N982
Detail Nozzle N983 and N984
Detail Nozzle N985 and N986
Detail Nozzle N987 and N988
Detail Nozzle N989 and N990
Detail Nozzle N991 and N992
Detail Nozzle N993 and N994
Detail Nozzle N995 and N996
Detail Nozzle N997 and N998
Detail Nozzle N999 and N1000

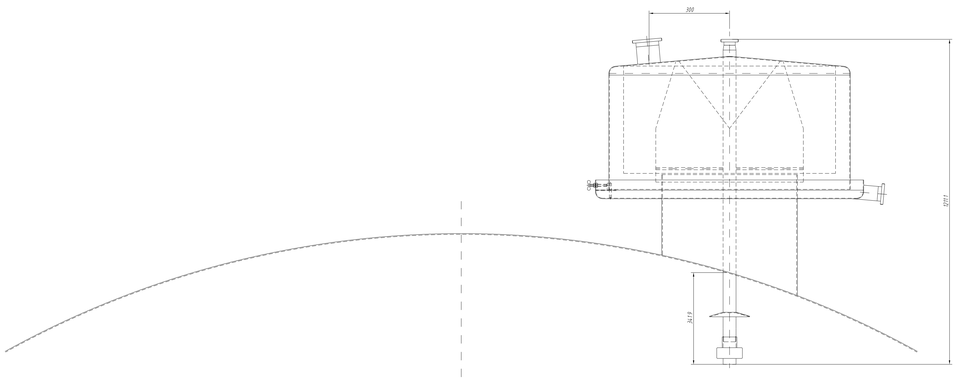

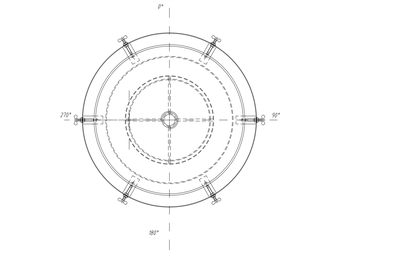

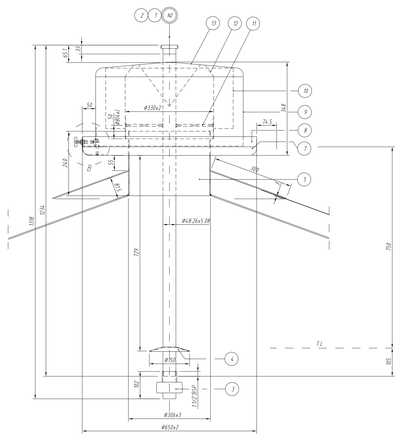

Detail Nozzle N2,N3
Scale 15

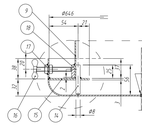

Detail B
Scale 125

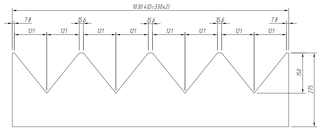

Detail Pos 12
Scale 15

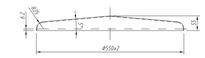

Detail Pos 13
Scale 15

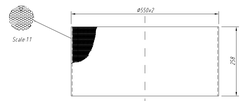

Detail Pos 9
Scale 15

Detail Pos 8
Scale 15

Detail Pos 10 Scale 15

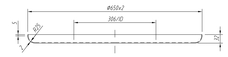

Detail Pos 14
Scale 125

Detail Pos 15
Scale 12

18	1	Flatbar 25x6 L=170.8	1.4404, 316/316L	-
17	12	Nut M8 DIN934	A4 DIN267	-
16	4	Angleiron 90 L=45	A4, 316	-
15	4	Plate 3 75x30	1.4404, 316/316L	-
14	4	Bar D=8 L=36	1.4404, 316/316L	-
13	1	Head D.D.=D.D.=550x2 H=55	1.4404, 316/316L	-
12	1	Plate 2 1030x775	1.4404, 316/316L	-
11	4	Bar D=8 L=139	1.4404, 316/316L	-
10	1	Plate 2 1038x425	1.4404, 316/316L	-
9	1	Perforated Plate 2 1120x258 Holes D.2 t=3	1.4404, 316/316L	-
8	1	Plate 2 203x38	1.4404, 316/316L	-
7	1	Flat End ID=ID1=25 H=312 t=2	1.4404, 316/316L	-
6	-	-	-	-
5	1	Pipe Welded D=355x3 L=2x3	1.4404, 316TI/L57	-
4	1	Plate 2 Conn D=150 t=4 H=15 ø=0°	1.4404, 316/316L	-
3	1	Spray Nozzle Turbodisc-Type FSD-360° Supplier APV	1.4404,	-
2	1	Make part DN40 DIN11851 Form A	1.4404,	-
1	1	Pipe seamless D=48.3x5.08 L=1200	A312 TP316L	-
REF.DESIG. NUMBER	QUANTITY	DESCRIPTION / DIMENSION	MATERIAL	COMP.

DSM
DSM GIST - DSM - Heerlen

Code no.	0	1	4	5	3	6	5	0	1
Project no.	8.273								
Drawing no.	0	0	1	W	5	4	3	7	5 A

Building: 01 Level: 14 Type: 5365 Type: 01
Location: 0 Serial no.: Sub.no.
Activated Size: A1

41 RIA.1 STATUS FAB		41 RIA.1 STATUS CLEAN		N.A. STATUS INSP. AUTHORITY			
D	A	31-10-2002	B	C	D	E	

SCALE 1:5 DATE REMARKS Numbers in parthesis are for 1.1mm
DRAWN D.D.G.STAA 28-08-2002
CHECKED T. de Jong 31-8-2002
PROJECT ALLIANCE MASTERPLAN / ODST
DSM GIST
SUBJECT STELGIST VGK - TANK ITEMNR. 014.36/V30
DETAIL NOZZLE N3 (ONTLUCHTING)

700710-04

gti GTI FIB Process Equipment
SMETERWEG 23 | 6135 TB SITTARD, EN. | TEL: 046 296 59 45 | www.fib-nl.
BPES INF. LEEUWARDEN | BKR NR. LEEUWARDEN | FAX 046 20 22 92 | engineer@gtifib.nl

COMP. A1 | DRAWING 700710 | SHEET NR 04-002

This document is confidential. Neither the whole or any part of this document may be disclosed to any third party or reproduced or any task without written consent of GTI FIB Process Equipment.

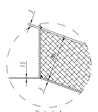

Detail A
Scale 125

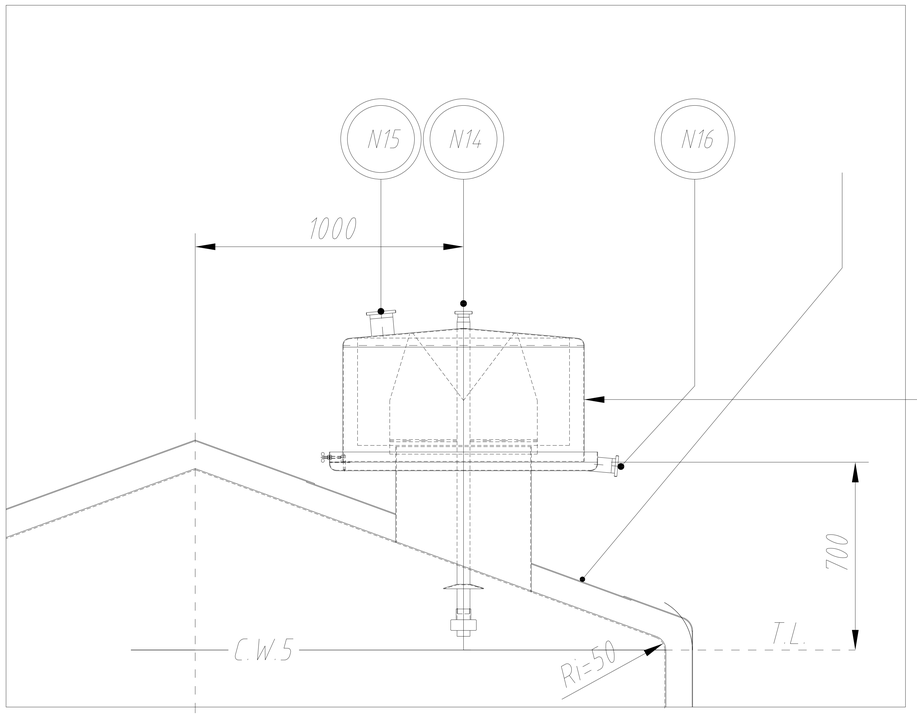

Beluchting zie
detail tekening
700710 sheet 01-002