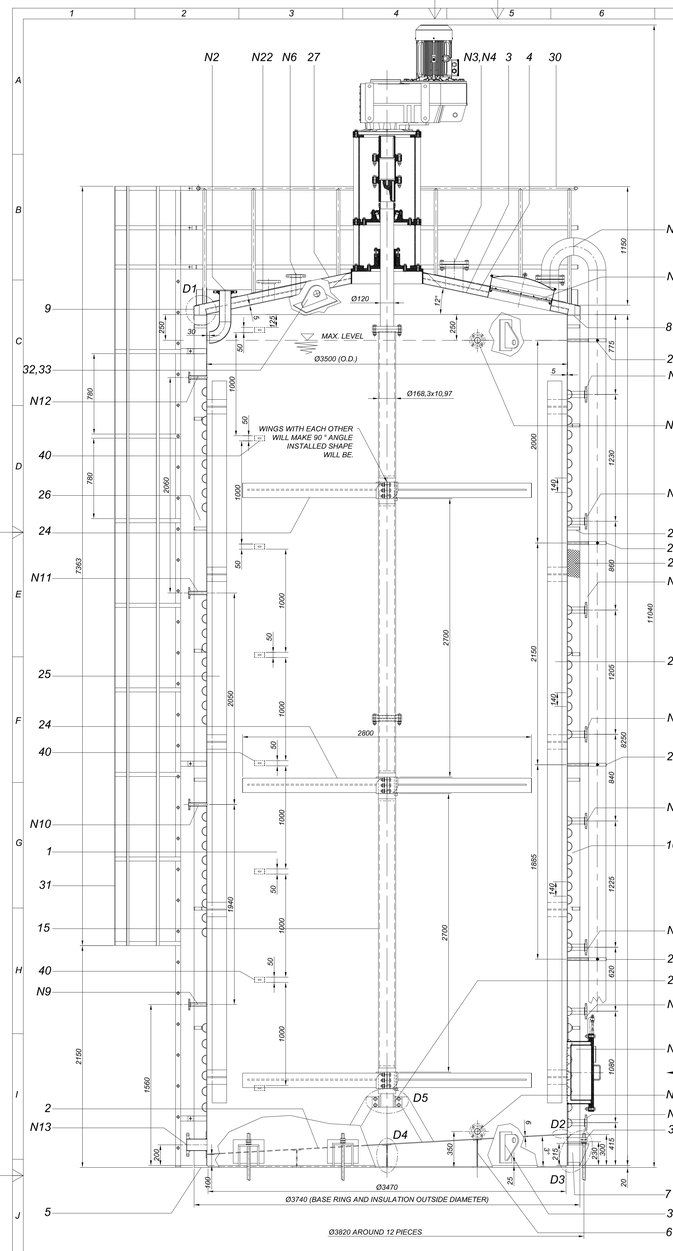

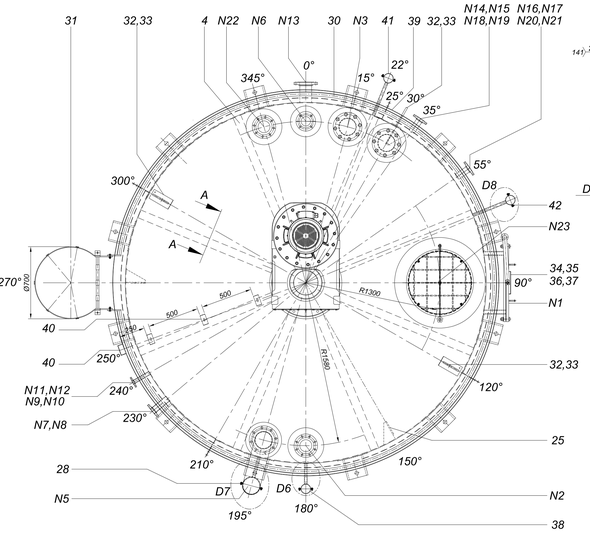

TANK NOZZLES ORIENTATION

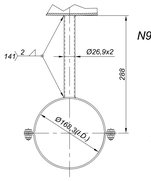

D7 DETAIL (P.NO:28)

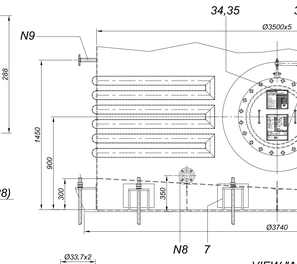

VIEW "A"

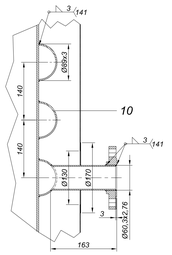

N14-N15-N16-N17-N18-N19
N20-N21 NOZZLES DETAIL

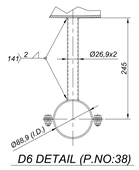

D6 DETAIL (P.NO:38)

SPECIFICATIONS			
STANDARD		API 620 / EN 13445 (SERPENTINE)	
CONTROL		KAISER PROCESS AND BELT TECHNOLOGY GmbH / MAKFEN	
		SHELL	SERPENTINE
DESIGN PRESSURE	Kpa	0.43	600
WORKING PRESSURE	Kpa	0.4	550
TEST PRESSURE	Kpa	WATER FILL	900
DESIGN TEMPERATURE	°C	100	120
WORKING TEMPERATURE	°C	95	100
TEST TEMPERATURE	°C	AMBIENT	AMBIENT
VOLUME	m^3	74.6 NET (78.19 GROSS VOLUME)	1.032
RADIOGRAPHY		NONE	NONE
INSULATION		100mm ROCK WOOL	
EMPTY WEIGHT	kg	10,087	
FULL WEIGHT	kg	80,087 (IF USEFUL VOLUME IS FILLED WITH WATER)	

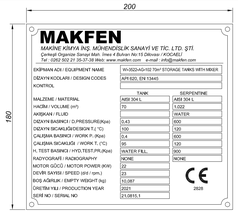

NAME PLATE (P.NO:35)

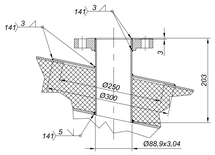

N6 NOZZLE DETAIL

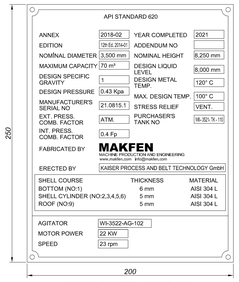

NAME PLATE (P.NO:37)

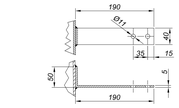

EARTHING PLATE DETAIL (P.NO:39)

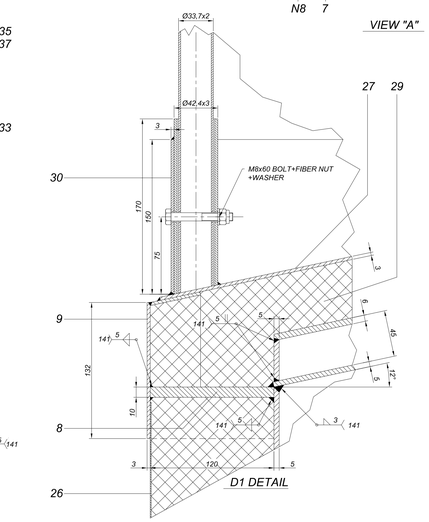

D1 DETAIL

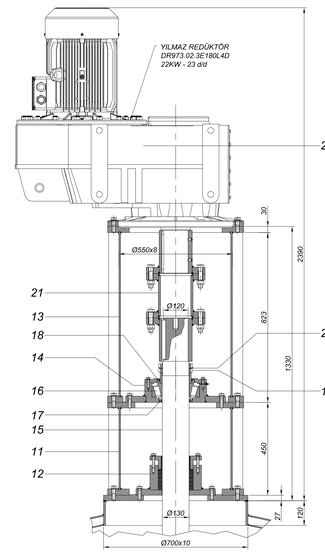

MIXER DRIVE GROUP DETAILS

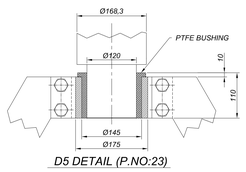

D5 DETAIL (P.NO:23)

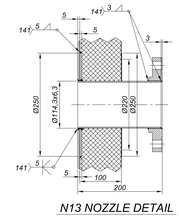

N13 NOZZLE DETAIL

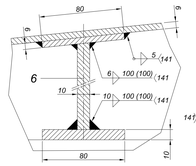

D4 DETAIL

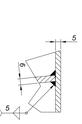

D2 DETAIL

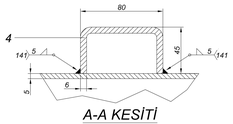

A-A KESİTİ

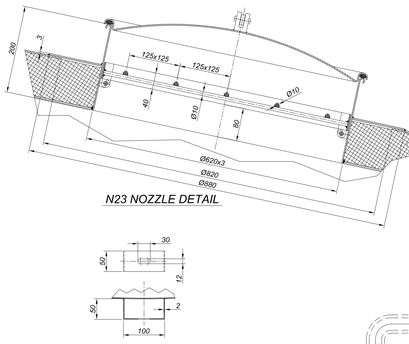

CABLE DUCT MOUNTING PROFILE (P.NO:40)

N23 NOZZLE DETAIL

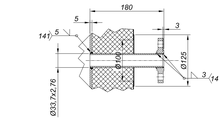

N9-N10-N11-N12 NOZZLES DETAIL

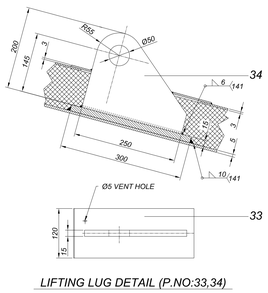

LIFTING LUG DETAIL (P.NO:33,34)

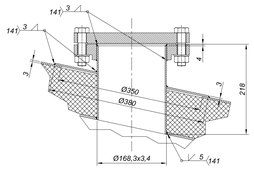

N3-N4 NOZZLES DETAIL

P.NO	DN	PN	TYPE	STANDARD	MATERIAL	NOZZLE PIPE SIZE	DESCRIPTION / NOZZLE NAME	PROJECT NO
N23	600	ATM	CLIP-ON COVER	C TYPE	AISI 304 L	Ø620x3x200	MANHOLE (GASKET:EPDM)	MADE PRODUCT
N22	100	150lb(RF)	S.O.W. FLANGE	ANSI B16.5	AISI 304 L	114.3x3.05x230	BURSTING DISC	MF321.042.KOK.001.009.00
N21	50	150lb(RF)	S.O.W. FLANGE	ANSI B16.5	AISI 304 L	60.3x2.76x160	SERPENTINE OUTLET	MF321.042.KOK.001.009.00
N20	50	150lb(RF)	S.O.W. FLANGE	ANSI B16.5	AISI 304 L	60.3x2.76x160	SERPENTINE INLET	MF321.042.KOK.001.009.00
N19	50	150lb(RF)	S.O.W. FLANGE	ANSI B16.5	AISI 304 L	60.3x2.76x160	SERPENTINE OUTLET	MF321.042.KOK.001.009.00
N18	50	150lb(RF)	S.O.W. FLANGE	ANSI B16.5	AISI 304 L	60.3x2.76x160	SERPENTINE INLET	MF321.042.KOK.001.009.00
N17	50	150lb(RF)	S.O.W. FLANGE	ANSI B16.5	AISI 304 L	60.3x2.76x160	SERPENTINE OUTLET	MF321.042.KOK.001.009.00
N16	50	150lb(RF)	S.O.W. FLANGE	ANSI B16.5	AISI 304 L	60.3x2.76x160	SERPENTINE INLET	MF321.042.KOK.001.009.00
N15	50	150lb(RF)	S.O.W. FLANGE	ANSI B16.5	AISI 304 L	60.3x2.76x160	SERPENTINE OUTLET	MF321.042.KOK.001.009.00
N14	50	150lb(RF)	S.O.W. FLANGE	ANSI B16.5	AISI 304 L	60.3x2.76x160	SERPENTINE INLET	MF321.042.KOK.001.009.00
N13	100	150lb(RF)	S.O.W. FLANGE	ANSI B16.5	AISI 304 L	114.3x6.3x195	PRODUCT DISCHARGE	MF321.042.KOK.001.009.00
N12	25	150lb(RF)	S.O.W. FLANGE	ANSI B16.5	AISI 304 L	33.4x2.77x177	SPARE INLET	MF321.042.KOK.001.009.00
N11	25	150lb(RF)	S.O.W. FLANGE	ANSI B16.5	AISI 304 L	33.4x2.77x177	TEMPERATURE SENSOR	MF321.042.KOK.001.009.00
N10	25	150lb(RF)	S.O.W. FLANGE	ANSI B16.5	AISI 304 L	33.4x2.77x177	SPARE INLET	MF321.042.KOK.001.009.00
N9	25	150lb(RF)	S.O.W. FLANGE	ANSI B16.5	AISI 304 L	33.4x2.77x177	TEMPERATURE SENSOR	MF321.042.KOK.001.009.00
N8	50	150lb(RF)	S.O.W. FLANGE	ANSI B16.5	AISI 304 L	60.3x2.76x172	PRESSURE INSTRUMENT	MF321.042.KOK.001.009.00
N7	50	150lb(RF)	S.O.W. FLANGE	ANSI B16.5	AISI 304 L	60.3x2.76x172	SPARE INLET	MF321.042.KOK.001.009.00
N6	80	150lb(RF)	S.O.W. FLANGE	ANSI B16.5	AISI 304 L	88.9x3.05x200	LEVEL SWITCH	MF321.042.KOK.001.009.00
N5	150	SCH 10(RF)	PIPE+ELBOW	ANSI B36.19	AISI 304 L	168.3x3.4x8090	AIR VENT	MF321.042.KOK.001.009.00
N4	150	150lb(RF)	S.O.W. FLANGE	ANSI B16.5	AISI 304 L	168.3x3.4x215	SPARE INLET	MF321.042.KOK.001.009.00
N3	150	150lb(RF)	S.O.W. FLANGE	ANSI B16.5	AISI 304 L	168.3x3.4x215	SIGHT GLASS	MF321.042.KOK.001.009.00
N2	100	150lb(RF)	S.O.W. FLANGE	ANSI B16.5	AISI 304 L	114.3x6.3x300	INLET	MF321.042.KOK.001.009.00
N1	600	PN 6(RF)	DAVIT	DIN 2527 / DIN 2573	AISI 304 L	Ø609x6x300	MANHOLE (GASKET:PTFE)	MF321.042.KOK.001.008.00

NOZZLE LIST

PLEASE DO NOT MEASURE FROM THE PROJECT

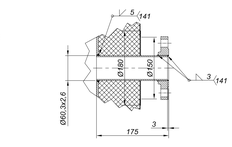

N7-N8 NOZZLES DETAIL

P.NO	PART NAME	PIECE	STANDARD/ PROJECT NO	MATERIAL	SIZE / DESCRIPTION
42	PIPE LOCATING CLAMP	4	ISO 1127	AISI 304 L	R3° CLAMP+R3/4" PIPE
41	PIPE LOCATING CLAMP	4	ISO 1127	AISI 304 L	R3° CLAMP+R3/4" PIPE
40	CABLE DUCT MOUNTING PROFILE	11	MF321.042.KOK.001.07.00	AISI 304 L	"U" 150x50x2 L=50
39	EARTHING PLATE	4	MF321.042.KOK.001.01.31	AISI 304 L	40x5 L=230
38	PIPE LOCATING CLAMP	4	ISO 1127	AISI 304 L	R3° CLAMP+R3/4" PIPE
37	API 620 NAME PLATE	1	MF321.042.KOK.001.07.31	AISI 304 L	250x200x0.5
36	API 620 NAME PLATE MOUNTING PROFILE	1	MF321.042.KOK.001.07.31	AISI 304 L	U 220x30 L=255
35	EN 13445 NAME PLATE	1	MF321.042.KOK.001.07.31	AISI 304 L	200x160x0.5
34	EN 13445 NAME PLATE MOUNTING PROFILE	1	MF321.042.KOK.001.07.31	AISI 304 L	U 220x30 L=185
33	LIFTING LUG	4	MF321.042.KOK.001.07.31	AISI 304 L	15x200x250
32	LIFTING LUG REINFORCEMENT SHEET	4	MF321.042.KOK.001.07.31	AISI 304 L	15x120x300
31	SHIPS LADDER AND GUARD	1	MF321.042.KOK.001.08.00	AISI 304 L	EB:32/PR:1+Sb1h=5x1STRP SHEET
30	TOP RAIL AND GUARD PLATE	1	MF321.042.KOK.001.08.00	AISI 304 L	033.7x2 PIPE + 4x5 STRIP SHEET
29	BODY AND TOP INSULATION	1	MADE PRODUCT	ROCK WOOL	83m²*110m²*94m³ THC 100mm
28	PIPE LOCATING CLAMP	4	ISO 1127	AISI 304 L	R6° CLAMP+R3/4" PIPE
27	CEILING CONE INSULATION SHEET AND REINFORCEMENT RINGS	1	MF321.042.KOK.001.05.31	AISI 304 L	Ø3700/704/3 h=325
26	BODY INSULATION SHEET AND REINFORCEMENT RINGS	1	MF321.042.KOK.001.05.31	AISI 304 L	EB:Kb1L=800+1h2.5TRIP SHEET
25	WAVE BREAKER	3	MF321.042.KOK.001.04.31	AISI 304 L	140x10, L=6000
24	MIXER BLADES	3	MF321.042.KOK.001.04.31	AISI 304 L	140x12 WIDTH:2800
23	MIXER BOTTOM BEARING GROUP	1	MF321.042.KOK.001.04.00	AISI 304 L	Ø120 SHAFT PTFE BUSHING
22	MIXER MOTOR - REDUCER GROUP	1	MADE PRODUCT	CS	22KW - 23 d/d
21	RIGID COUPLING	1	MF321.042.KOK.001.04.00	AISI 304 L	Ø168,3x10,97 L=215
20	LOCK WASHER (MB)	1	MADE PRODUCT	SKF / FAG	MB 26
19	LOCK NUT (KM)	2	MADE PRODUCT	SKF / FAG	M130x2
18	ROTARY SHAFT SEAL	1	MADE PRODUCT	NBR	Ø150/0/180/12
17	ROTARY SHAFT SEAL	1	MADE PRODUCT	NBR	Ø130/0/160/12
16	CONICAL BALL BEARING	1	MADE PRODUCT	SKF / FAG	NO 32226
15	MIXER SHAFT GROUP	1	MF321.042.KOK.001.04.00	AISI 304 L	Ø130 SHFT-D168,3/0,97 PFE (+B50)
14	BEARING BODY AND COVER	1	MF321.042.KOK.001.04.00	S235JR	Ø450x95
13	MIXER UPPER BODY	1	MF321.042.KOK.001.04.00	S235JR	Ø650x353
12	GASKET BEARING BODY AND COVER	1	MF321.042.KOK.001.04.31	AISI 304 L	Ø350x140
11	MIXER BOTTOM BODY	1	MF321.042.KOK.001.04.31	AISI 304 L	Ø660x450
10	HALF PIPE SERPENTINE	4	MF321.042.KOK.001.03.31	AISI 304 L	133x3 STRIP SHEET
9	INSULATION RINGS SURROUNDING SHEET	1	MF321.042.KOK.001.01.31	AISI 304 L	Ø3746x3 L=132
8	INSULATION HAT	1	MF321.042.KOK.001.01.31	AISI 304 L	Ø3740 / Ø3550 h=10
7	ANCHOR FIXING PLATE GROUP	12	MF321.042.KOK.001.01.31	AISI 304 L	h=15
6	BASE SUPPORT PLATES	1	MF321.042.KOK.001.02.31	AISI 304 L	h=10
5	BASE RING	1	MF321.042.KOK.001.01.31	AISI 304 L	Ø3740/Ø3470 h=20
4	CEILING CONE REINFORCEMENT PROFILES	8	MF321.042.KOK.001.07.31	AISI 304 L	U 80x45x6, L=1444
3	CEILING CONE	1	MF321.042.KOK.001.01.31	AISI 304 L	Ø3570/Ø700, h=310, h=5
2	TANK BASE SHEET	1	MF321.042.KOK.001.01.31	AISI 304 L	Ø3490x5
1	SHELL	1	MF321.042.KOK.001.01.31	AISI 304 L	Ø3500x5 L=8250

Pickling and passivation will be made on the inner and outer surfaces of the tank.

Nozzle loads to find in document FFBA0510-P-014-J02-0001 Acceptable Nozzle Loads

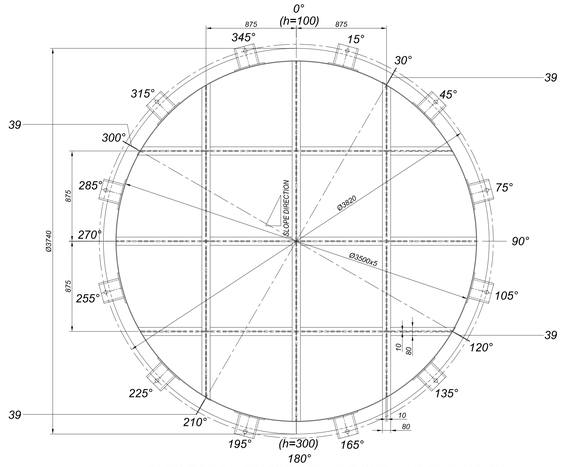

TANK BASE REINFORCEMENT SHEET ORIENTATION

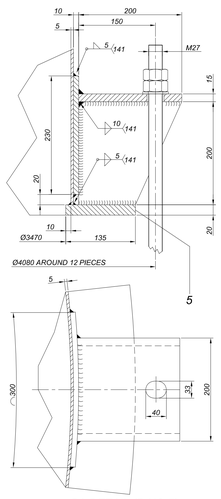

D3 DETAIL (P.NO:7)

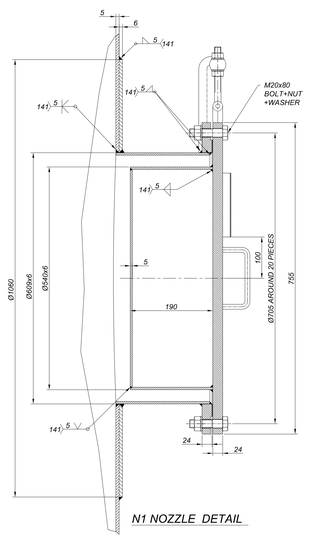

N1 NOZZLE DETAIL

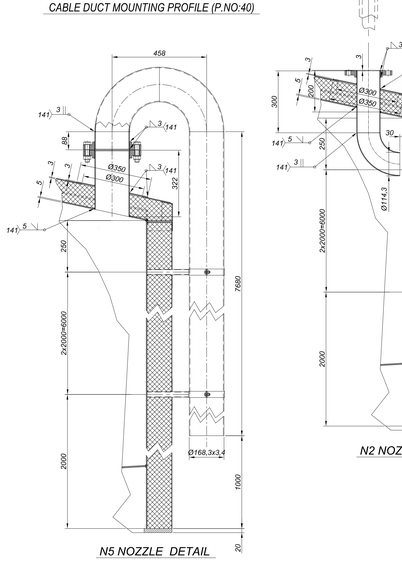

N5 NOZZLE DETAIL

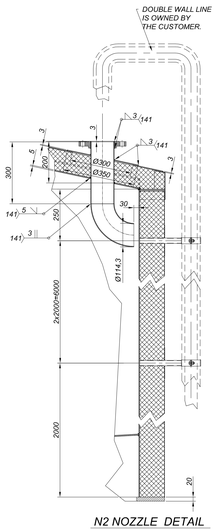

N2 NOZZLE DETAIL

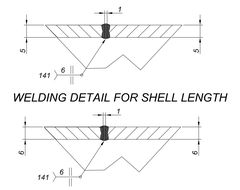

WELDING DETAIL AROUND THE SHELL

WELDING DETAIL FOR SHELL LENGTH

BASE SHEET WELDING DETAIL

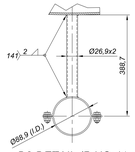

D8 DETAIL (P.NO:41,42)

REV. NO	TARİH	AÇIKLAMALAR	YAPAN	KONTROL	ONAY
11	29.11.2021	SHELL LIFTING LUG, EARTHING PLATE POSITIONS AND NAME PLATE HAS CHANGED	U. KÖMÜRLÜ	M. YAVUZ	G. KURUBAL
10	01.10.2021	MIXER NAME REVISED AND CEILING CABLE MOUNTING PROFILES ADDED	M. YAVUZ	M. YAVUZ	G. KURUBAL
9	09.09.2021	N13 NOZZLE AND GROUND PLATES HAVE BEEN REVISED	M. YAVUZ	M. YAVUZ	G. KURUBAL
8	25.08.2021	CABLE MOUNTING PROFILE AND EARTHING PLATE ADDED	M. YAVUZ	M. YAVUZ	G. KURUBAL
7	16.08.2021	NOZZLE LOADS TABLE HAS BEEN ADDED TO THE PROJECT	M. YAVUZ	M. YAVUZ	G. KURUBAL
6	05.08.2021	REVISIONS STATED IN THE CUSTOMER'S E-MAIL DATED 4 AUGUST	M. YAVUZ	M. YAVUZ	G. KURUBAL
5	28.07.2021	GENERAL REVISION ACCORDING TO CUSTOMER REQUESTS	M. YAVUZ	M. YAVUZ	G. KURUBAL
4	17.06.2021	MANHOLE MOUNTING ANGLE CHANGED (TK.110.-90°, TK.111.-270°)	M. YAVUZ	M. YAVUZ	G. KURUBAL
3	20.05.2021	WAVE BREAKING DIRECTIONS ADDED TO THE PROJECT	M. YAVUZ	M. YAVUZ	G. KURUBAL
2	10.05.2021	LIFTING LUG REINFORCEMENT SHEET AND MERKLE THREAD REVISED	M. YAVUZ	M. YAVUZ	G. KURUBAL
1	23.04.2021	TANK HEIGHT AND NOZZLES REVISED	M. YAVUZ	M. YAVUZ	G. KURUBAL

REVİZYON

	İSİM	TARİH	İMZA	MALZEME	ADET
ÇİZEN	M. YAVUZ	08.04.2021		AISI 304 L	1
KONTROL	M. YAVUZ	08.04.2021			
ONAY	G. KURUBAL	08.04.2021			

AS BUILT

MAKFEN
MACHINE PRODUCTION AND ENGINEERING
www.makfen.com info@makfen.com

ÖLÇEK 1/20	İŞİN ADI : W-3522 - AG-102 70m³ STORAGE TANKS WITH MIXER	İŞ EMRİ	2006914
		SIPARIŞ KODU P. NO	2006914 00
A0		PROJE NO.	MF321.042.KOK.001.000.00