This document must not be copied without our written permission, and the contents thereof must not be imparted to a third party nor be used for any unauthorized purpose. Contravention will be prosecuted. ZETTERSTRÖMS ROSTFRIA AB

Denna handling får ej kopieras utan vårt medgivande. Den får ej heller delgivas annan eller eljest obehörigen annöjas. Overträdelse hålles beivrad med stöd av gällande lag. ZETTERSTRÖMS ROSTFRIA AB

Tolerances for manufacturing
Heat exchanger
No: Z-VVX-1

Beräkningsdata / Design data

Tillverkare / Manufacturer	Zetterströms Rostfria AB - Molkom - Sweden		
	Shell side (2)	Media side (tube side) (1)	
Volym / Volume	30 L	6 L	
Beräkningstryck / Design pressure	-1/10 bar (g)	-1/10 bar (g)	
Beräkningstemp / Design temp	-30/150 °C	-30/150 °C	
Provtryck / Test pressure	26 bar (g) (Z)	26 bar (g) (Z)	
Drifttryck / Working pressure	See datasheets	See datasheets	
Drift temp. / Working temp.	See datasheets	See datasheets	
Material / Materials	1.4404/1.4301/1.4306/1.4307	1.4404/14432/1.4435	
Fluid grupp / Fluid group	2	1	
Kategori / Kategory	II	Kategori / Category	II
Modul / Module	H	Modul / Module	H
Styrkefaktor / Welding joint efficiency	0.7	Ber. norm / Design Code	EN13445-3
Svetsmetod / Welding process	TIG	Direktiv / Directive	97/23/EG (AFS 1999:4)
Tillsatsmaterial / Welding additive	ESAB TIGROD 16.32		
Oförstörande provn. / Non destr. testinig	Penetrant		
Korrosionstillägg / Corrosion allowance	NA		
Förvärmning / Preheating	NA		
Medium / Medium	See datasheets	Värmebehandling / Heat treatment	NA
Vikt tom / Weight empty	Approx 90 kg	Vattenfylld / Filled with water	Approx 126 kg

Preparation data:
Ao:8462 Pcs:1
Main drawing: 1-11744
PED

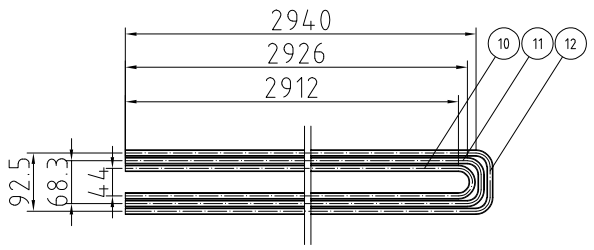

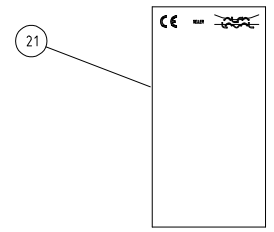

Nozzle schedule

Pos. / Item	Benämning / Service	Form / Facing	Std. Dimension. / Std. Dimension.
T1	Tube Inlet	TC - OD 1"(Ø25,4x1.65)	
T2	Tube Outlet	TC - OD 1"(Ø25,4x1.65)	
M1	Shell Inlet	Weld neck flange DIN 2633 DN40 (Ø48.3)	
M2	Shell Outlet	Weld neck flange DIN 2633 DN40 (Ø48.3)	

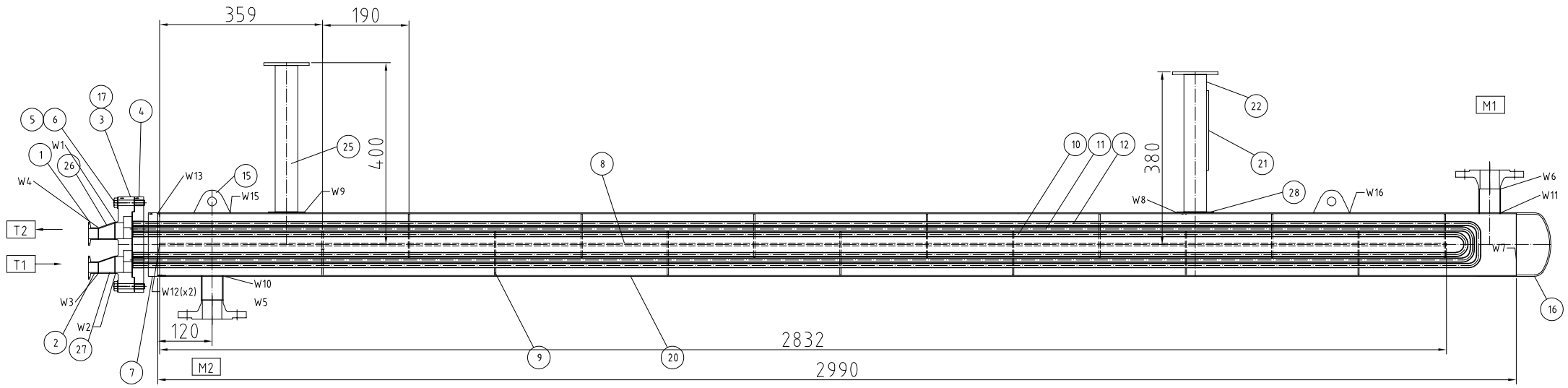

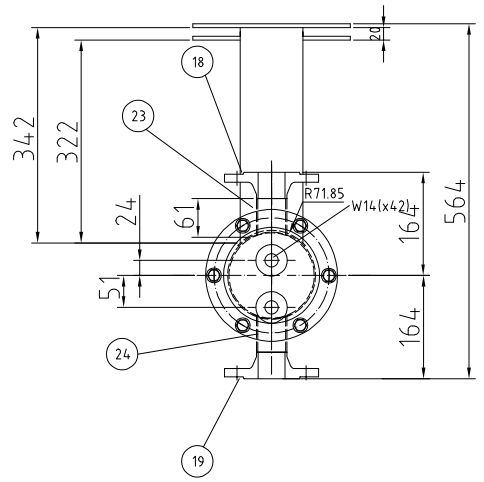

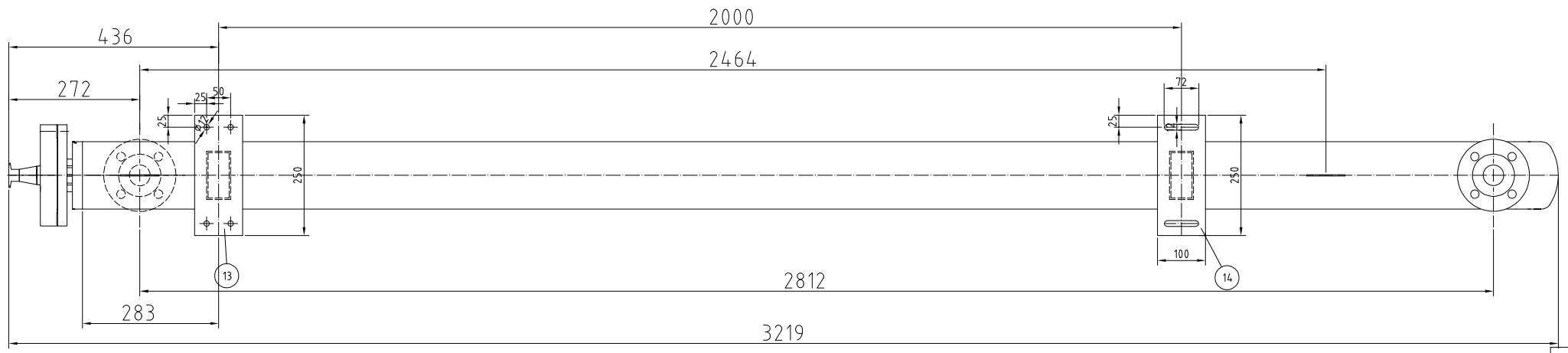

External surface: pickled surface
Internal surface: Ra<0.8 µm

A	Approved	2011-11-08	LJ

Seller
Alfa Laval Tumba AB

Design	Drawn	Cop.	Stand.	Approved by - date	Scale	Replaced	Replaced by
LJ	LJ				-		

Zetterströms Rostfria AB
Molkom – Sweden

Pharmaline 3-3,7

Date: 2011-10-31
Drawing number: 1-11744 A