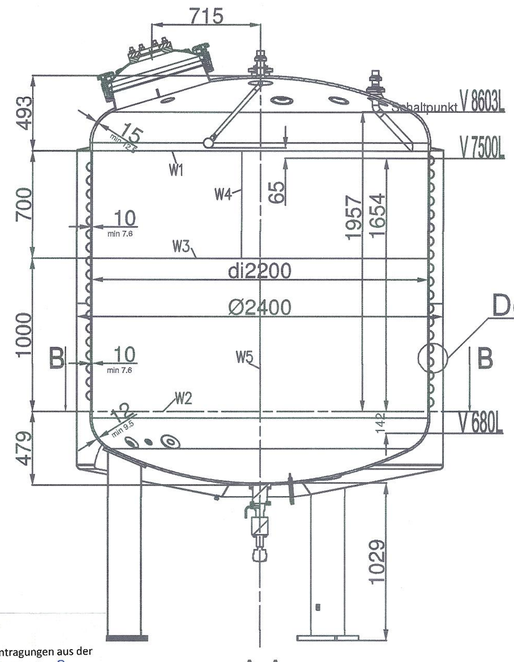


A-A

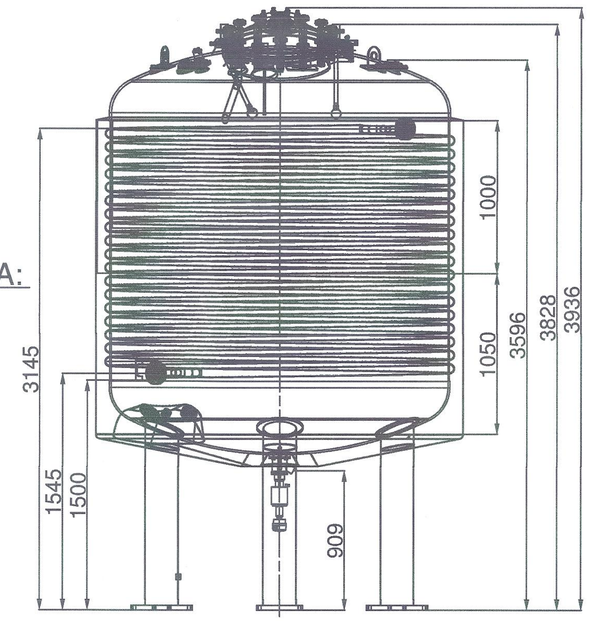


Name plate M 1:2

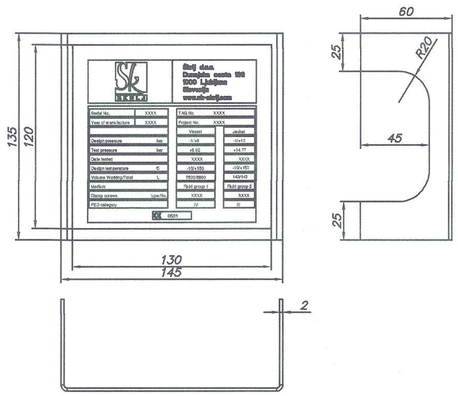


| Pos. | Dim. | Description | Norm | Nozzle type | Pcs. | Material | | | |
|---|---|---|---|---|---|---|---|---|---|
| N80 | 1/4" | Test socket insulation | Supplier standard | socket with thread | 1 | W.Nr.1.4301 | | | |
| N83 | 32 | Inlet tempering media | DIN EN 1092-1 11 | welding neck flange | 1 | W.Nr.1.4571 | | | |
| N84 | 32 | Outlet tempering media | DIN EN 1092-1 11 | welding neck flange | 1 | W.Nr.1.4571 | | | |
| N58 | Ø50 | Spare | | Nuovo Bicombrol | 1 | W.Nr.1.4539 | | | |
| N50 | 1"1/4 | Spare | Ingold | 25H7 | 1 | W.Nr.1.4539 | | | |
| N55 | 40 | Sampling | No-connect | Din. DIN 11866-B | 1 | W.Nr.1.4539 | | | |
| N52 | 1/2" | Temperature measurement | | Thermowell | 1 | W.Nr.1.4539 | | | |
| N50 | 40 | Bottom outlet | Stäbno block flange | Tipo Stäbno SNP | 1 | W.Nr.1.4539 | | | |
| N181 | 32 | Inlet pipe | DIN 11864-3 BKS | Din. DIN 11866-B | 1 | W.Nr.1.4539 | | | |
| N89 | 65 | Inlet pipe(J tube) | DIN 11864-3 BKS | Din. DIN 11866-B | 1 | W.Nr.1.4539 | | | |
| N161 | 15 | CIP inlet 3 | DIN 11864-3 BKS | Din. DIN 11866-C | 1 | W.Nr.1.4539 | | | |
| N10 | 100 | CIP 3 | DIN 11864-3 BKS | Din. DIN 11866-B | 1 | W.Nr.1.4539 | | | |
| N162 | 40 | CIP inlet 2 | DIN 11864-3 BKS | Din. DIN 11866-B | 1 | W.Nr.1.4539 | | | |
| N12 | 100 | CIP 2 | DIN 11864-3 BKS | Din. DIN 11866-B | 1 | W.Nr.1.4539 | | | |
| N141 | 40 | CIP inlet 1 | DIN 11864-3 BKS | Din. DIN 11866-B | 1 | W.Nr.1.4539 | | | |
| N14 | 100 | CIP 1 | DIN 11864-3 BKS | Din. DIN 11866-B | 1 | W.Nr.1.4539 | | | |
| N13 | 50 | Spare port | No-connect | Din. DIN 11866-B | 1 | W.Nr.1.4539 | | | |
| N82 | 40 | Ventilation | DIN 11864-2 BF | Din. DIN 11866-B | 1 | W.Nr.1.4539 | | | |
| N11 | Ø25 | Level switch | | Nuovo Bicombrol | 1 | W.Nr.1.4539 | | | |
| N9 | 40 | Filling level | DIN 38976 | Din. DIN 11866-B | 1 | W.Nr.1.4539 | | | |
| N8 | Ø25 | Pressure probe | | Nuovo Bicombrol | 1 | W.Nr.1.4539 | | | |
| N7 | Ø25 | Pressure gauge | | Nuovo Bicombrol | 1 | W.Nr.1.4539 | | | |
| N5 | 32 | Rupture disc | No-connect | Din. DIN 11866-B | 1 | W.Nr.1.4539 | | | |
| N4 | 50 | Sight glass with light | DIN 11864-3 BKS | Din. DIN 11866-B | 1 | W.Nr.1.4539 | | | |
| N3 | 150 | Sight glass | similar DIN 28017 | ampliis block flange | 1 | W.Nr.1.4539 | | | |
| N1 | 600 | Manhole | | Zimmerlin lid | 1 | W.Nr.1.4539 | | | |

Detail B:
M 1:1

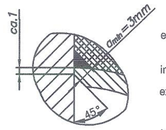


material non product contacted parts: W.Nr.1.4301

| | |
|---|---|
| external surface finishing: | bottom, tank wall and lid scotch brite (SB); Ra<1,2µm |
| internal product contact surface finishing: | brushed, certified roughness Ra<0,6 µm 100% of the surface |
| external welds finishing: | cleaned and mechanically polished and passivated, weld structure is visibile, Ra<1,2µm, roughness of the weld surface is not inspected. |
| internal product contact welds finishing: | butt welds flat brushed (K220), certified roughness 100% Ra<0,6 µm, corner welds brushed (K220), certified roughness 100% Ra<0,6 µm |

δ-ferite content for all materials <3% and welding seams <= 3 %

| | | INSIDE | OUTSIDE |
|---|---|---|---|
| SURFACE DATA | ROUGHNESS Ra (µm) | <0,6 | <1,2 |
| | WORKING PROCESS | brushed | scotch brite |
| | REMARKS | / | / |
| | | SHELL | JACKET |
| WELDING DATA | WELDING PROCESS | TIG-141/TIG-142 PAW-15 | TIG-141/TIG-142 PAW-15 |
| | MATERIAL OF WELDING WIRE | Ma | Ma |
| | WELDERS CERTIFICATE | SIST EN 9606-1,14732 | SIST EN 9606-1,14732 |
| | METHOD OF THE WELDED JOINTS TESTING | radiographic | radiographic |
| | Penetration test – product contact welds (%) | 100 | 10 100(VT) |
| | RT radiographic (%) – CROSS WELDS TEST | 100 | 100 |
| | RT radiographic (%) – LONGITUDINAL WELDS TEST | 100 | 10 |
| | RT radiographic (%) – CIRCUMFERENTIAL WELDS TEST | 25 | 10 |
| | STANDARD: AD2000; SR 930.114; 2014/68/EU (PED) | SHELL | JACKET |
| MATERIAL DATA | MATERIAL | W.Nr.1.4539 | W.Nr.1.4571 |
| | SEALS | EPDM peroxide cured TSE/BSE free FDA USPclassVI | Gylon Bio Pro USPclassVI |
| | SIGHT GLASS | Borosilicate acc. to DIN 7080 | |
| | SCREWS,NUTS | A2-70/A2-70 | |
| | INSULATION | mineralwool (ISOVER) acc.AG/0132 | |
| | REMARKS | / | / |
| | STANDARD: AD2000; SR 930.114; 2014/68/EU (PED) | SHELL | JACKET |
| DESIGN AND WORKING DATA | DESIGN PRESSURE (bar(g)) | -1/6 | -1/10 |
| | OPERATION PRESSURE (bar(g)) | -1/+2.1 | 0/+6 |
| | TEST PRESSURE (bar(g)) | 8.92 | 14.77 |
| | DESIGN TEMPERATURE (°C) | -10/+150 | -10/+150 |
| | OPERATION TEMPERATURE (°C) | +15/+135 | +15/+135 |
| | TOTAL VOLUME (L) | 8890 | 143 |
| | WORKING VOLUME (L) | 7500 | 143 |
| | NUMBER OF LOAD CYCLES (N) | 8000 | 8000 |
| | MEDIUM | Fluid group 1 | Fluid group 2 |
| | MEDIUM DENSITY (kg/m3) | 1200 | 1000 |
| | TOTAL VESSEL WEIGHT (kg) | 3036 | |
| | EFFECTIVE HEATING SURFACE (m²) | 6,7 | |
| | PERMISSIBLE DESIGN STRESS LEVEL IN JOINTS | v=0,85 | |
| | VESSEL CLASSIFICATION – TEST GROUP | IV | III |
| | REMARKS | PED modul H1 | PED modul H |

| | | |
|---|---|---|
| VESSEL DATA | NAME | MEDIA HOLD VESSEL 7500L 3B3520 |
| | TYPE | Vertical pressure vessel |
| | DESCRIPTION – FORM | Cylindrical with torispherical end |
| | DESCRIPTION – SITUATION | Vertical |
| | DESCRIPTION – DESTINATION | Pressure vessel |
| | DESCRIPTION – SEISMIC ZONE | SIA 261 – Zone 1 |
| | SERIAL NUMBER | xxxxxxxx |
| | CLIENT | CSL BEHRING AG |
| | PRODUCER | ŠKRLJ d.o.o. |
| | YEAR OF PRODUCTION/TEST | 2018/XX-2018 |
| | REMARKS | / |

**WEISSFREIGABE**

Überprüfung der Einarbeitung von Handeintragungen aus der AFC Freigabezeichnung vom 25.07.2017, Revision 2.
Alle Anpassungen wurden ordnungsgemäß übernommen.

Geprüft M+W: 07.09.17 Genehmigt CSL: 14.09.17

Genehmigt M+W: 07.09.17

Detail A:
M 1:2

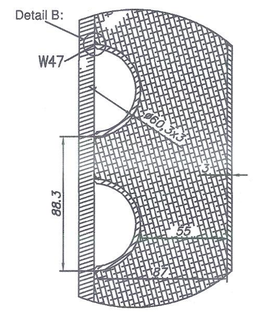


Leg/earthing
M 1:5

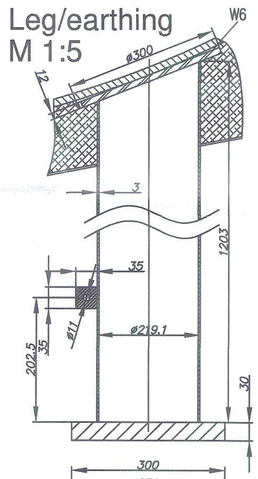


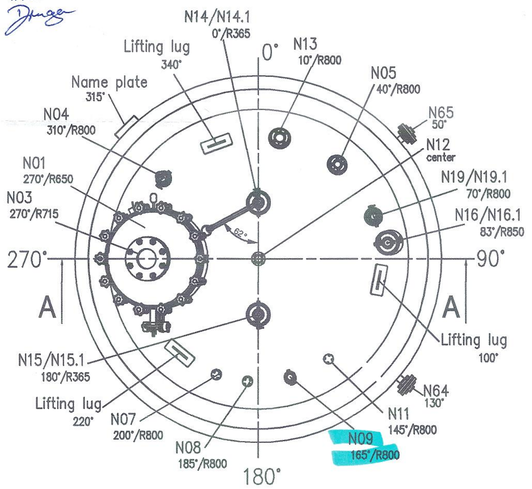


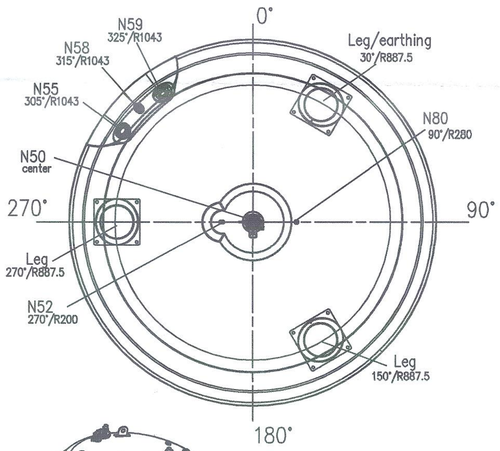


LIFTING LUGS
M 1:2

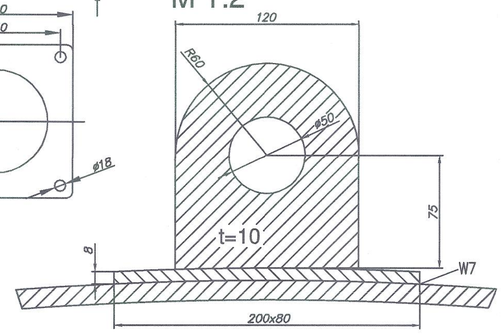


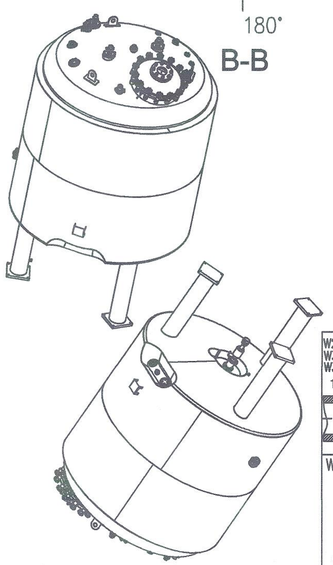

B-B

M 1:2

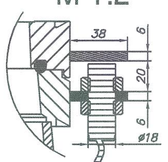


N01,N03
M 1:5

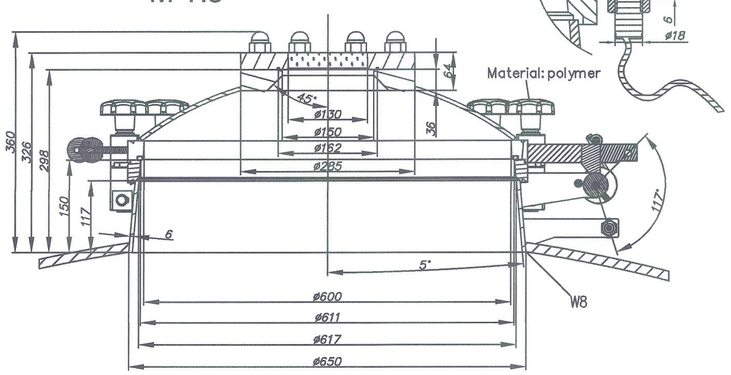


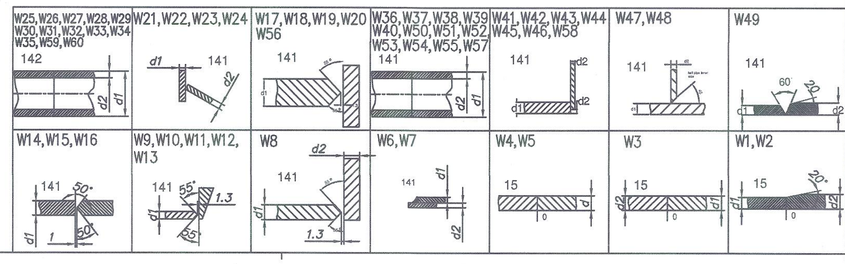


| Mark | Modification | Date | Signature |
|---|---|---|---|
| 5 | R5 | 07.09.17 | Robert |
| 4 | R4 | 04.09.17 | Robert |
| 3 | R3 | 27.07.17 | Robert |
| 2 | R2 | 19.07.17 | Robert |
| 1 | R1 | 14.07.17 | Robert |

| | Date | Name | Signature |
|---|---|---|---|
| Chief | 14.6.17 | ŠKRLJ T. | |
| Constructor | 14.6.17 | Robert C. | |
| Drawn by | 14.6.17 | Robert C. | |
| Checked by | 14.6.17 | ŠKRLJ T. | |

DIN ISO 2768-1:m

Material: W.Nr.1.4539/1.4571/1.4301

Scale: M1:20

Mass-kg/piece: 3036

Title: MEDIA HOLD VESSEL 7500L 3B3520

Drawing Nr.: 115160

Sheet: 1/2

MEDIA HOLD VESSEL 7500L 3B3520_R5

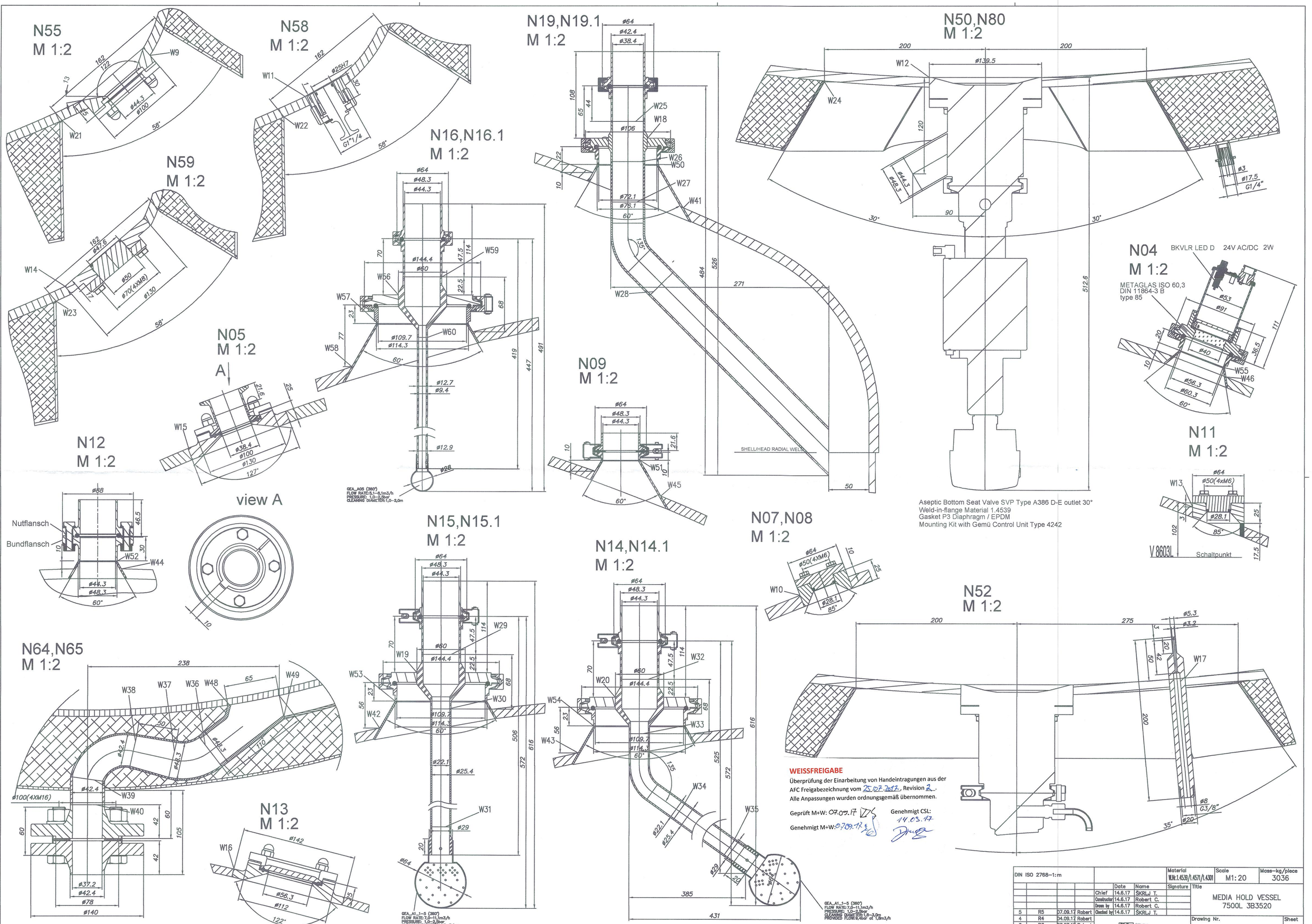


Aseptic Bottom Seat Valve SVP Type A386 D-E outlet 30°
Weld-in-flange Material 1.4539
Gasket P3 Diaphragm / EPDM
Mounting Kit with Gemü Control Unit Type 4242

**WEISSFREIGABE**

Überprüfung der Einarbeitung von Handeintragungen aus der AFC Freigabezeichnung vom 25.07.2017, Revision 2.
Alle Anpassungen wurden ordnungsgemäß übernommen.

Geprüft M+W: 07.09.17

Genehmigt M+W: 07.09.17

Genehmigt CSL: 14.03.17

| | | | | | | | | | | | |
|---|---|---|---|---|---|---|---|---|---|---|---|
| DIN ISO 2768–1:m | | | | | | | | Material WNr.1.4539/1.4571/1.4301 | Scale M1:20 | Mass–kg/piece 3036 | |
| | | | | | Date | Name | Signature | Title | | | |
| | | | | Chief | 14.6.17 | SKRLJ T. | | MEDIA HOLD VESSEL 7500L 3B3520 | | | |
| | | | | Constructor | 14.6.17 | Robert C. | | | | | |
| | | | | Drawn by | 14.6.17 | Robert C. | | | | | |
| 5 | R5 | 07.09.17 | Robert | Checked by | 14.6.17 | SKRLJ T. | | Drawing Nr. 115160 | | Sheet 2/2 | |
| 4 | R4 | 04.09.17 | Robert | | | | | | | | |
| 3 | R3 | 27.07.17 | Robert | | | | | | | | |
| 2 | R2 | 19.07.17 | Robert | | | | | | | | |
| 1 | R1 | 14.07.17 | Robert | | | | | | | | |
| Mark | Modification | Date | Signature | | | | | MEDIA HOLD VESSEL 7500L 3B3520_R5 | | | |